amplicomms

PowerTel 980

User Guide

At a glance

Please open this page for an ‘At a glance’ guide to your PowerTel 980

At a glance

Please open this page for an ‘At a glance’ guide to your PowerTel 980

Corded phone base

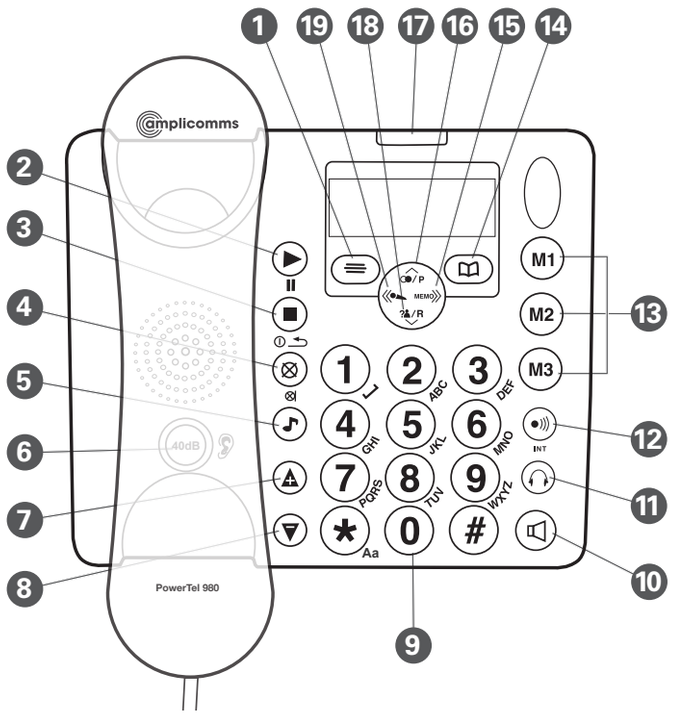

1. Menu/OK
2. Play/Pause
3. Stop
4. Mute/Delete
5. Equaliser
6. 40dB Boost (under handset)
7. Volume up
8. Volume down
9. Keypad
10. Handsfree
11. Headset
12. Find handset (Page key) / Intercom / Registration
13. Quick dial memories/ User profiles
14. Phonebook
15. Fast forward/ Memo
16. Up/Redial/ Pause
17. Incoming call light/New messages received
18. Down/Calls list/Recall
19. Rewind/OGM

Cordless handset and charger base

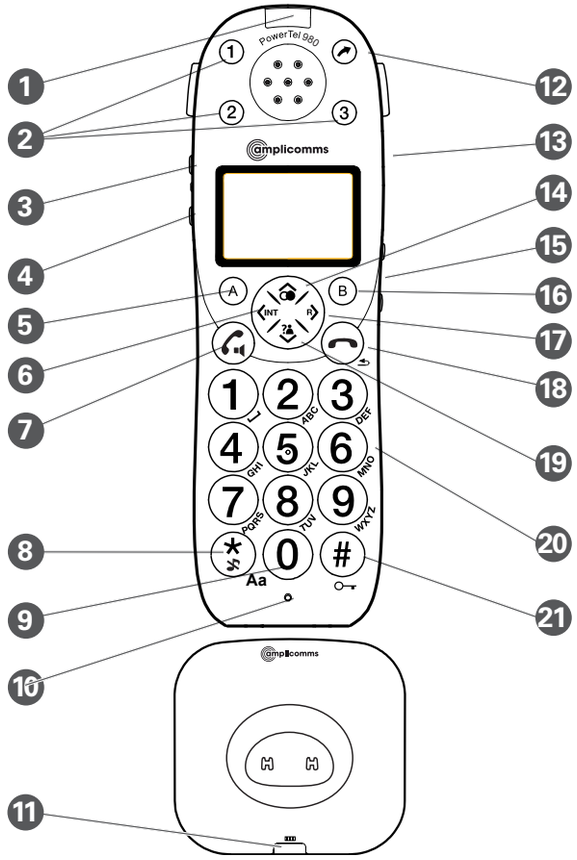

1. Incoming call light
2. Memory 1, 2, 3
3. Boost button with LED
4. Profile setting
5. Left softkey (opens the menu in standby state)
6. Internal key
7. External call/ Handsfree
8. ✱/Ringer on/off
9. Pause (long press 0)
10. Microphone
11. Charging light
12. Call transfer
13. Headset socket (Headset not included)
14. Up/Redial
15. Volume (+ / -)
16. Phonebook/ Save/OK
17. Recall
18. End call
19. Down/Calls list/ Equalizer
20. Keypad
21. #/Keylock

Wrist shaker

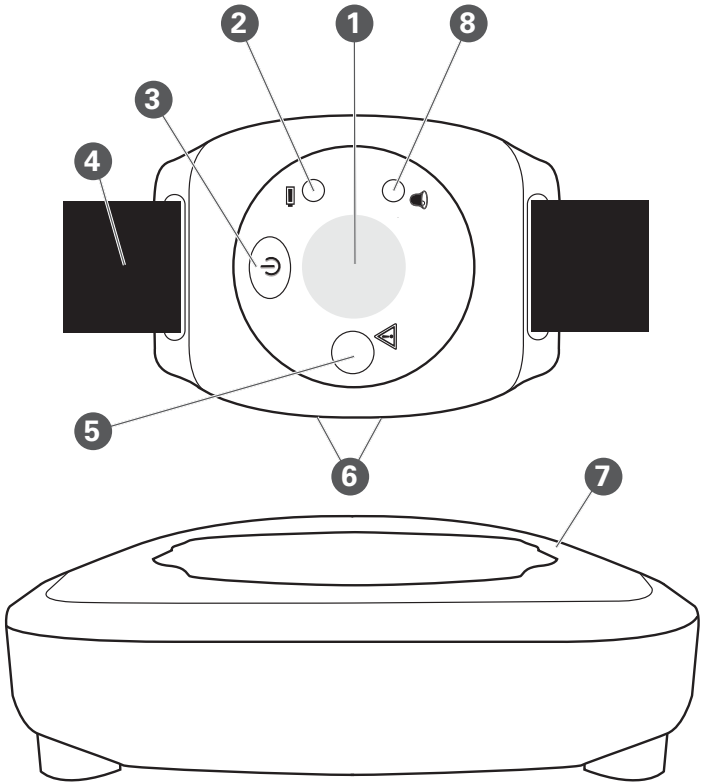

1. Emergency button
   Note: Can only be used with the PowerTel 980 telephone
2. Battery charging red light
3. Power on/off
4. Wrist strap
5. Registration mode/ Out of range/Low battery 2 colour green or red light
6. Charging contacts
7. Charging unit
8. Incoming call green light

Getting started **10**
Check box contents 10

Set up your phone system in four simple steps **11**

Connecting and charging your wrist shaker **13**

Corded phone display icons explained **17**

Handset display icons explained **18**

Phone menu guide **20**
How to use your phone menu display 20
Basic guide 20

Making and receiving calls **24**
Make a call using your corded phone 24
Make a call using your cordless handset 24
End a call 24
Take a call 25
Redial a number using your corded phone 25
Redial a number using your cordless handset 26
Call back a previous caller 26
Dial a number in your phone book 27
Dial a number using the quick dial buttons 27
Adjust the handset earpiece volume 28
Boost the handset earpiece volume 28
Setting the tone / Equalizer 28

Handsfree feature 29
Use handsfree calling on the corded phone 29
Use handsfree calling on your cordless handset 29
See call length 29
Use a headset (not included) 30
Mute 30
Switch the handset ringer on and off 30
Lock and unlock the handset keypad 30
Make an internal call 31
Transfer an external call internally 32
Make a conference call from the corded phone 33
Make a conference call from the cordless handset 34
Find handset 34
Power failure – What to do 35

Using your menu – corded phone 38
User Profiles 38
Change the profile name 38
Change a profile's handset volume 39
Change a profile's boost setting 39
Change a profile's tone ('equalizer') setting 40
Copy a profile 41
Choosing which profile to use 42
Change ringer melody 42
Record a personal ringer melody 43

Change ringer volume 44
Switching the boost function on permanently 44
Switch key tone on or off 45
Change display contrast 45
Change display language 46
Read number 46
Change case 47
Change System PIN 47
Change date/time 48
Change clock hours to 12- or 24-hour format display 48
Reset to default settings 49

Using your phone book – corded phone 50
How to use the keypad when using your phone book 50
Enter a name and number in your phone book 51
Edit a phone book entry 51
Delete a phone book entry or all entries 52
Copy phone book entries to another phone 52

Using your quick dial memory – corded phone 54
Store a quickdial name and number 54
Edit a quick dial entry 54
Delete a quick dial entry 55

Using your calls list – corded phone 56
Store numbers from your calls list to the phonebook or Quick dial memory (M1, M2, M3) 57
Delete a single calls list entry 57
Delete all entries in the call list 58

Using your menu - cordless handset 60
User Profiles 60
Change a profile name 60
Change a profile's handset volume 61
Change a profile's boost setting 61
Change a profile's tone ('equalizer') setting 62
Copy a profile 62
Choosing which profile to use 63
Change the handset ringer melody 64
Change the handset ringer volume 64
Change the tone ('equalizer') setting 65
Boost on 65
Change handset name 66
Switch keypad beep on or off 66
Change contrast 67
Switch auto talk on or off 67
Change backlight timer 68
Switch confirmation beep on or off 68
Select base 69

Change language 69
Change date/time 70
Change clock hours to 12- or 24-hour format 70
Set alarm 71
Change base (corded phone) ringer melody 72
Change base (corded phone) ringer volume 72
Change system PIN code 73
Appointment 74
Stop watch 75
Reset to default settings 75

Using your phone book - cordless handset 76
How to use the keypad when using your phone book 76
Enter a name and number in your phone book 77
Edit a phone book entry 77
Delete a phone book entry or all entries 78
Copy phone book entries to the Corded phone or another registered handset78

Using your quick dial memory buttons - cordless handset 80
Store a quick dial name and number 80
Edit a quick dial entry 80
Delete a quick dial entry 81

Using your calls list - cordless handset 82
Store numbers from your calls list to the phone book 83

Store numbers from your calls list to a quick dial memory 83
Delete a single calls list entry 84
Delete all calls list entries 84

Using your answering machine 86
Switch answering machine on or off 86
Taking a call from the answering machine 86
Set the answering machine language 86
Adjust the base loudspeaker volume 87
Set the answer mode 87
Record your outgoing message 88
Check your outgoing message 88
Set the answer delay 89
Record a memo 90
Listen to messages or memos using the base buttons 90
Delete a single message or memo 91
Delete all old messages and memos using the base 91
Listen to messages or memos using your handset 91
Memory full 91
Remote access to your answering machine 92
Change PIN 92
Call in to check messages 93
Remote access instructions guide 94

Using your wrist shaker 96
Switch on 96

Switch off 96
Make sure your wrist shaker is in range 97
Battery low 97
Incoming calls 97
Emergency call 98
Storing emergency numbers in the telephone 98
SOS message 100
Record a personal SOS message 100
Listen to your personal SOS message 101
Delete your personal SOS message 101
Activating an emergency call 102
To activate an emergency call 103
To cancel an emergency call 103
Register your wrist shaker 104

Registering / deregistering handsets 106
Register a handset 106
Deregister a handset 107

Use on a private branch exchange 110
To set the recall time on the corded phone 110
To set the recall time on the cordless handset 110
Insert a dialling pause 111
Using additional services 111
Set the dial mode on the corded phone 112

Set the dial mode on the cordless handset 112

Help and support 114
Troubleshooting guide 114

Safety information 120
Intended use 120
Phone location 120
Power supply 121
Medical equipment 121
Rechargeable batteries 121
Hearing aid compatibility 122
Disposal 122
Technical details 123
Default settings 124

Maintenance and guarantee 125
Maintenance 125
Guarantee 125
Declaration of conformity 126

Getting started

Getting started

Important: please make sure you've read the safety information on page 120 before you set up your phone system.

Check box contents

If you have purchased a PowerTel 980 pack you should have:

- 1 corded phone (base)
- 1 corded handset
- 1 handset coil cord
- 1 cordless handset
- 1 battery cover
- 1 belt clip
- 1 wrist shaker with a wrist strap attached
- 1 power adapter
- 1 charger base with power adapter
- 1 telephone cable
- 3 rechargeable AAA 1.2V 750mAh NiMH batteries
- 1 charger unit for the wrist shaker (with power adapter plug attached)

Important: use only the power adapters, telephone line cord and batteries supplied with your PowerTel 980 otherwise your phone may not work.

Set up your phone system in four simple steps

1 Connect your corded phone

1 Plug the power adapter into the socket marked on the underside of your corded phone and the other end into the mains power wall socket and switch the power on.
2 Plug the telephone cable into the socket marked on the underside of your corded phone and plug the other end into the phone wall socket.
3 Connect the handset to the telephone base using the coiled cord.

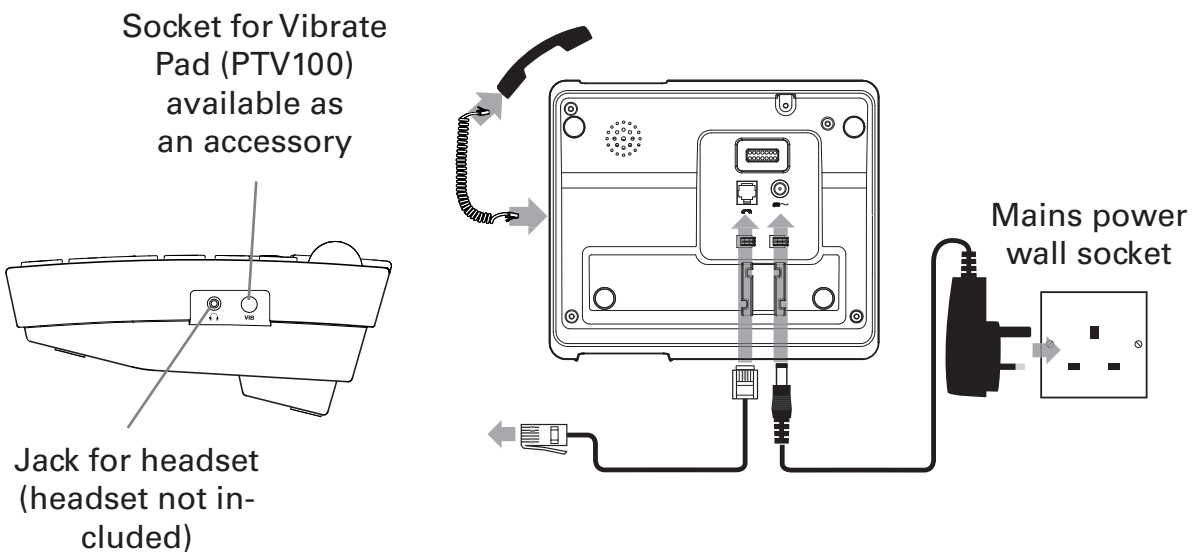

Important: use only the power adapters, telephone line cord and batteries supplied with your PowerTel 980 otherwise your phone may not work. You should ensure access to the power adapter plug is not obstructed by furniture or such.

2 Connect your charger base

Plug the other power adapter that's already attached to your charger base into your mains power wall socket and switch the power on.

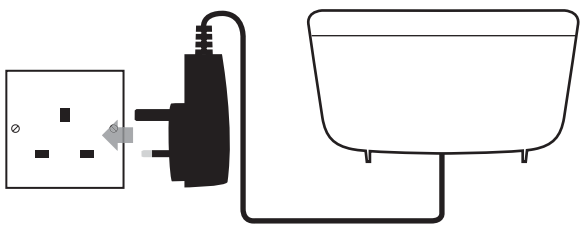

3 Install your batteries

1 Insert your rechargeable batteries into your handset. Make sure they're the right way round so '+' lines up with '+'.
2 Replace your handset's battery compartment cover.

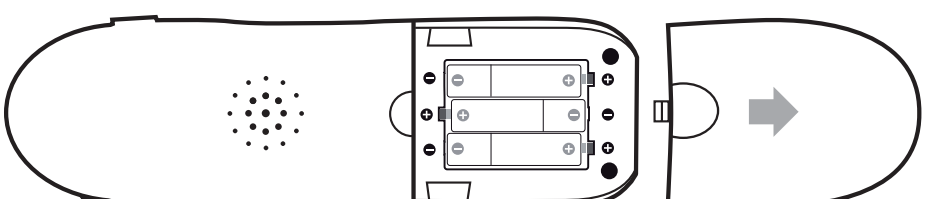

4 Charge your handset

So it can charge fully, place your handset on its base to charge for at least 16 hours (make sure the power socket is switched on!).

Important: only use the rechargeable 750mAh NiMH batteries supplied. Over time if you need to replace the batteries make sure they are of the same type as those supplied. Never use Alkaline batteries.

Attach the belt clip

There is a belt clip included in the box that you can attach to the back of your handset if required. Simply turn the handset over and slot the belt clip securely into the two recesses located on either side of the handset.

Connecting and charging your wrist shaker

1 Position your charger unit

Make sure your charger unit:

- is on a dry, flat and stable surface
- isn't a trip hazard with its power cable
- is at least one metre from other electrical appliances

2 Plug in the charger unit

Plug your charger unit into your power supply. And switch on at the socket.

3 Place the wrist shaker in the charger unit

When you place your wrist shaker on its charger unit, make sure its two connection points are facing down into the unit. You'll know your wrist shakeris charging properly when you see a red light on it.

So it can charge fully, your wrist shaker needs to charge for at least 10 hours before you can use it (make sure the power socket is switched on!).

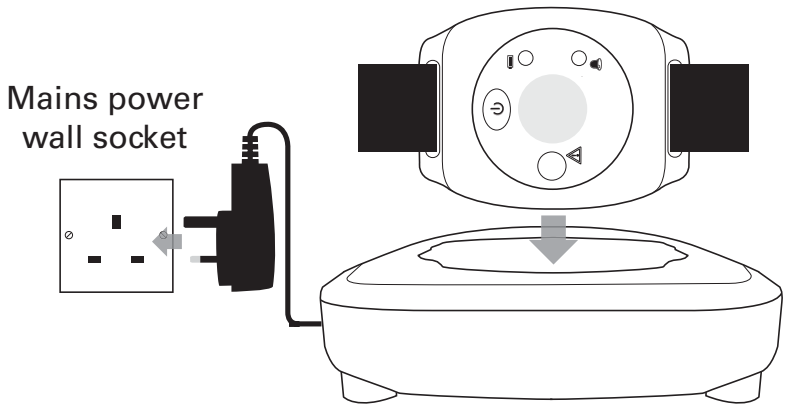

Note: when fully charged, your wrist shaker's battery should last five days. The larger red light will flash slowly when the battery is low and you will need to charge it for about another ten hours.

Helpline 0844 800 6503 (See page 114 for costs and hours of operation)

4 Switch your wrist shaker on

Press and hold the ⏻ button for about five seconds. You'll see the green light with the warning triangle come on.

Note: if the light flashes green then red it means your wrist shakereither isn't registered or is out of range. Move closer to your PowerTeltelephone to ensure you are within range. If the light still flashes, see page 104 for registration instructions.

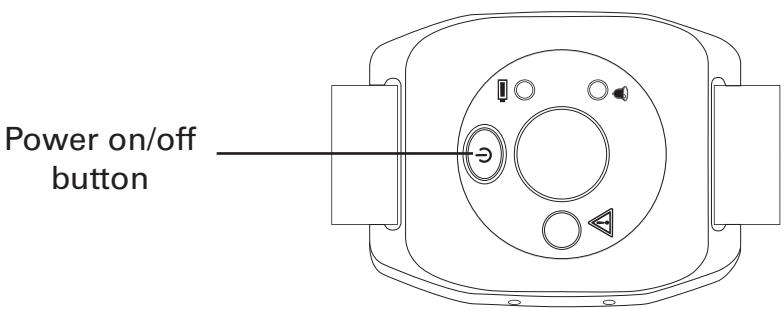

To switch your wrist shaker off, press and hold the ⏻ button for about five seconds. The green light will go off.

5 Turn on “SOS Motor” feature

You need to turn on the SOS Motor feature on your telephone for your wrist shaker to vibrate when you receive an incoming call.

1 At the corded phone, press the left hand button under the display .

2 Press on the large central round button to scroll to SOS Motor and press the button again.

3 Use the or buttons to scroll to **On** and press the button again. **Saved** is displayed.

Wrist strap

The wrist strap comes pre-attached to the wrist shaker but if you need to re-attach or adjust it please follow these instructions:
Thread the wrist strap through the slot on one side of the wrist shaker (front to back), around the back and then through the other slot (back to front), just like you would with a wrist watch.
You can now wear your wrist shaker and tighten comfortably with the velcro fastening.

Your telephones and wrist shaker are now ready for use!

Helpline 0844 800 6503 (See page 114 for costs and hours of operation)

Corded phone display icons explained

The following icons appear in your corded phone display to indicate:

Phone book mode

Ringer off

Handsfree mode

Call in progress

Boost receiver volume is on (Icon will flash)

Mute microphone

You have new calls

Internal call in progress

Handset display icons explained

The following icons appear in your cordless handset display to indicate:

Menu

Confirm / OK

Back

Phone book mode

There is more information to view on the left

There is more information to view on the right

Battery status

Ringer off

An alarm is activated

Helpline 0844 800 6503 (See page 114 for costs and hours of operation)

Keylock is on

Handsfree mode

Call in progress

Boost receiver volume is on (Icon will flash)

Mute handset microphone

You have new calls

When steady, the handset is in range of the base
When flashing, the handset is out of range of the base

Internal call in progress

Answering machine is on

Answering machine is off

Phone menu guide

Use this section to find your way around the menu display on your phones.

How to use your phone menu display

When you've set up your phones and everything's connected, use your menu display to do things with your phone – from changing the ringer sound to setting up user profiles and saving phone numbers.

Basic guide

Open main menu: press (corded phone) or (handset).

Browse sub menu: open your main menu and then press or .

Select sub menu item: scroll using or until the item you're looking for is shown and then press (corded phone) or (handset).

Browse a function: open your sub menu and then press or .

Helpline 0844 800 6503 (See page 114 for costs and hours of operation)

Select a function: scroll using or until the function you're looking for is shown and then press (corded phone) or (handset).

Enter digits or letters: use your keypad.

Confirm or save an entry or action: press (corded phone) or (handset)..

Cancel and return to standby: press (corded phone) or (handset).

Note: if you don't do anything, your phone will automatically go on standby after 30 seconds.

Private exchanges: if your phone is going to use a private exchange (for example, if you have to dial '9' to get an outside line, please follow the steps on page 110).

Making and receiving calls

Making and receiving calls

Make a call using your corded phone

As you enter each number to be dialled it will be announced to you. For this feature to work you must have the Read number feature set to On, see page 46.

1. Enter the number you wish to call using your corded phone's keypad.
2. If you make a mistake, press to delete the last digit.
3. Dial the number by picking up the handset or pressing .
4. End your call by putting the handset back in its cradle.

Make a call using your cordless handset

1. Enter the number you wish to call using your handset's keypad.
2. If you make a mistake, press to delete it.
3. Dial the number by pressing .
4. End your call by pressing .

End a call

Simply put the handset in its base cradle if you're using your corded phone or press on the cordless handset.

Take a call

Corded phone: Simply lift the handset or press .

Cordless handset: Simply lift the handset off the charger base (if "**Auto Talk**" is set to ON, see page 67) and speak into the phone or, if the handset is off the charger base (or "**Auto Talk**" is set to OFF, see page 67), press and then speak into the phone.

Redial a number using your corded phone

Your corded phone stores the last five numbers you've dialled (max. 24 digits each).

1. Open the redial list by pressing .
2. Scroll through the redial list using the or buttons until the number you wish to redial is highlighted. To dial the number simply lift the handset or press to dial in handsfree mode.

Note: each phone number will be announced as you scroll through the redial list provided the Read Number feature is enabled. See page 46, "Read number" for details.

Redial a number using your cordless handset

Your handset stores the last ten numbers you've dialled (max. 24 digits each).

1. Open the redial list by pressing .
2. Scroll through the redial list using or until the number you wish to redial is highlighted and then press to dial the number.

Call back a previous caller

Your phone stores the last 30 incoming calls.

1. Open the incoming calls list by pressing (corded phone) or (cordless handset).
2. Scroll to find the number you want to call back using or then lift your corded handset or press on the cordless handset.

Note: each phone number will be announced (corded phone only) as you scroll through the incoming calls list provided the Read Number feature is enabled. See page 46, "Read number" for details.

Dial a number in your phone book

To store a phone number in your phone book, see page 51 (corded phone) or page 77 (cordless handset).

1. Open your phone book by pressing (corded phone) or (handset).
2. Scroll to find your number using or then lift your corded handset or press on the cordless handset.

   or

   enter the first letter of the desired entry using the keypad (e. g. “m” for “Miller”. If there are more than one entry beginning with “m“ scroll to find your number using or then lift your corded handset or press on the cordless handset.

Dial a number using the quick dial buttons

To store phone numbers under your quick dial memory buttons, see page 54 (corded phone) or page 80 (cordless handset).

1. Choose your quick dial number by pressing M1 , M2 or M3 on the corded phone or 1 , 2 or 3 on the cordless handset.

2. Lift your corded phone handset or press on the cordless handset to dial the number.

Note: the quick dial number you've selected will be announced (corded phone only) when you press the quick dial button provided the Read Number feature is enabled. See page 46, "Read number" for details.

Adjust the handset earpiece volume

You can increase or decrease the volume to suit you. To adjust the volume while you're making a call, press the buttons and on the corded phone or and on the right side of the handset.

Boost the handset earpiece volume

To boost the handset earpiece volume while you're making a call, press the key on the corded phone or the key on the top left side of the handset.
An image of an ear will flash in the display to show that boost is on.

Setting the tone / Equalizer

To set the tone (equalizer) during a call, press on the corded phone and set the sound by pressing the keys or 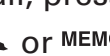 ..
On the cordless handset press or during a call.

Handsfree feature

Use the handsfree feature to talk to your caller without holding the handset or to let other people in the room listen to the conversation.

Use handsfree calling on the corded phone

1. To switch handsfree mode on and off, simply press .
2. To adjust handsfree volume, press or (there are 5 levels).

Use handsfree calling on your cordless handset

1. Switch on handsfree mode by pressing the key twice.
2. Exit handsfree mode by pressing .
3. To adjust the handsfree volume, press the buttons and on the right of the handset.

Note: you can't boost volume when using handsfree calling.

See call length

You can see the call time on your display.

Use a headset (not included)

Simply plug your headset into the headset socket marked on the right side of the corded phone as well as on the handset. This socket can also be used with an Induction Neck Loop NL100 (not supplied).

Mute

During a call you can mute the microphone so your caller cannot hear you.

To switch off the microphone, simply press (corded phone) or (handset).

To switch it on again, simply press (corded phone) or (handset) again.

Switch the handset ringer on and off

To switch the ringer on and off, simply press and hold for a couple of seconds.

Lock and unlock the handset keypad

You can still answer calls as usual when your keypad is locked.

To lock the keypad, press and hold for 3 seconds. The icon will be displayed. To unlock, press and hold again for 3 seconds.

Make an internal call

Your corded phone base has an internal call number 0, and your cordless handset 1. You can make internal calls between the two devices. These calls are free of charge.

1. Press INT on the cordless handset or

on the corded phone. The display will show **Internal -** (on the handset) or **Handset?** (on the corded phone).

   Enter the internal call number of the device you want to call, e.g. **1** (to call handset) or **0** (to call the corded phone).
2. To accept the call lift the handset on the corded phone or press on the cordless handset.
3. End your call by replacing the handset on the base cradle or press on the cordless handset.

Transfer an external call internally

1. During your external call, press INT or on the cordless handset.
2. Then enter the internal call number of the device you want to transfer the call to e.g. **0** (to transfer the call to corded phone). If you are using the corded phone, press INT for approx. 3 seconds, until you hear a short beep.
2. To accept the call on the receiving handset, press or lift the handset on the corded phone.
3. You can now speak to the person answering and tell them you are going to transfer a call. The call will be transferred when you press on the cordless handset or replace the handset on the corded phone.

Note: if no one picks up the call you're trying to transfer, you can take the call back on your phone by pressing INT or A .

Helpline 0844 800 6503 (See page 114 for costs and hours of operation)

Make a conference call from the corded phone

It's easy to hold a conference call between one external and two internal callers.

1. During your external call, press and hold

until a short beep is heard, then enter the internal call number of the handset you want to transfer the call to e.g. **1** (to call cordless Handset 1).
2. To accept the call on the receiveing handset, press .
3. Once the call has been received on the other handset that you've dialled, activate your conference call by pressing and holding

for 2 seconds.
4. You can put the external call on hold by pressing

.
5. The conference call will end when you put the handset back in its cradle.

Make a conference call from the cordless handset

1. During your external call, press INT or . Then enter the internal call number of the handset you want to transfer the call to e.g. **0** (to call the corded phone).
2. To accept the call on the receiving device, lift the handset on the corded phone.
3. Once the call has been received on the other handset that you've dialled, activate your conference call by pressing B briefly.
4. The conference call will end when you press .

Find handset

You can locate a missing handset or alert a handset user that they are wanted by causing the handset to beep from the corded phone.

1. Press INT on the corded phone. The handset(s) will beep.
2. Press any button on the handset to stop the handset(s) beeping.

Helpline 0844 800 6503 (See page 114 for costs and hours of operation)

Power failure – What to do

If your mains power fails, you can still use your corded phone to make and receive calls – though the incoming call light won't work, your caller's details won't be stored, and the display will only show when you lift the handset. You can still also:

- View and dial numbers using your phonebook or the M1 , M2 and M3 keys
- Dial out a telephone number
- Adjust the earpiece volume
- Mute the microphone

Using your menu - corded phone

Using your menu – corded phone

For information on your phone book, please go to page 50.
For information on your answering machine, please go to page 86.

User Profiles

You can store 3 different user profiles, each with different settings for the "Volume", "Boost" and "Equalizer" feature by naming it (Max 10 letters).

Priority/Default Setting

If you are the main user of this telephone you should change the settings in the menu so that they are just right for you. These settings will be memorised automatically whenever you wish to make or answer a call.
The user profile feature can be used by others in the household whose preferences for volume, boost and equalizer will also be memorised and applied as indicated below.

Change the profile name

1. Open your menu by pressing (≡), then scroll using ●/P or ?♟/R until you highlight **Profile** and press (≡).
2. Scroll using ●/P or ?♟/R until you highlight the desired profile and press (≡).

3. Scroll using or until you highlight **Name** and press .
4. Delete the current name by pressing .
5. Enter a new name (up to ten letters) and press .

Change a profile's handset volume

You have a choice of five volume levels.

1. Open your menu by pressing , then scroll using or until you highlight **Profile** and press .
2. Scroll using or until you highlight the desired profile and press .
3. Scroll using or until you highlight **Volume** and press .
4. You'll see the current volume level (e.g. 3).
5. Change the volume level using or and press .

Change a profile's boost setting

1. Open your menu by pressing , then scroll using or until you highlight **Profile** and press .
2. Scroll using or until you highlight the desired profile and press .

3. Scroll using or until you highlight **Boost** and press .
4. You'll see the current boost setting (i.e. On or Off).
5. Change the boost setting using or and press .

Change a profile's tone ('equalizer') setting

1. Open your menu by pressing , then scroll using or until you highlight **Profile** and press .
2. Scroll using or until you highlight the desired profile and press .
3. Scroll using or until you highlight **Equalizer** and press .
4. You'll see the current tone setting.
5. Change the tone setting using or and press .

Note: when you finish changing any profile settings, press to put the corded phone back to standby.

Copy a profile

You can easily copy a profile to another registered and compatible PowerTel phone.

1. Open your menu by pressing , then scroll using or until you highlight **Profile** and press .
2. Scroll using or until you highlight the desired profile and press .
3. Scroll using or until you highlight **Copy** and press .
4. Scroll using or until you highlight the handset (e.g. 1, 2, 3, 4 or 5) you want to copy the profile to, and press .
5. On the handset you're copying the profile to: to confirm, press .
   Or to cancel, press .

Choosing which profile to use

You need to use the handset to choose a profile to use for a call – you can't choose a profile using handsfree.

Before you answer an incoming call, press M1 , M2 or M3 – depending on which profile you want to use. The display will confirm your choice.

When you want to make a call and before you dial the number, press and hold M1 , M2 or M3 – depending on which profile you want to use. The display will confirm your choice.

Note: once you've selected a profile to use when making a call, you have about 30 seconds to dial the call under that profile before the system will return to its default settings.

Change ringer melody

You have a choice of 10 ringer melodies (+ max. 5 personal ringer melodies) for external calls and 9 ringer melodies for internal calls.

1. Open your menu by pressing ☰, then scroll using ●/P or ?/R until you highlight **Ringer Tone** and press ☰.
2. Choose whether you want to use this melody for external or internal calls by scrolling ●/P or ?/R to highlight either **EXT Melody** or **INT Melody**, and press ☰.

Helpline 0844 800 6503 (See page 114 for costs and hours of operation)

3. You'll see the current settings.
4. Scroll using or until you highlight the ringer tone you want to use and press .

Record a personal ringer melody

You can record personal ringer melodies. They will appear in the list of melodies for external calls. You can record up to 5 personal ringer melodies.

1. Open your menu by pressing , then scroll using or until you highlight **Ringer Tone** and press .
2. Scroll using or until you highlight **Rec. Ringer** and press .
3. Scroll using or until you highlight **Record New** and press .
4. Record your personal ringer tone after the beep.
5. Stop recording by pressing .
6. Enter a name for the personal ringer tone and press .

In the menu "Rec. Ringer" you can rename your personal ringtones and delete them one by one or all.

Change ringer volume

You have a choice of five volume levels plus **Off**.

1. Open your menu by pressing , then scroll using or until you highlight **Ringer Tone** and press .
2. Scroll using or until you highlight **Volume** and press .
3. You'll see the current volume level (e.g. **Ring Vol 5**).
4. Change the ringer volume using or and press .

Switching the boost function on permanently

When this feature is set to "On" the boost function is activated permanently. The display shows .

During a call the boost button is illuminated and flashes in the display.

By pressing the button you can switch off the boost function for the current call. It will be switched on again for the next call.
If the boost function is switched off, you can activate it by pressing . It will be switched off again for the next call.

1. Open your menu by pressing , then scroll using or until you highlight **Settings** and press .

2. Scroll using /P or ?/R until you highlight **Boost On** and press .
3. You'll see the current boost memory setting (e.g. **Off**).
4. Change the boost memory setting using /P or ?/R and press .

Switch key tone on or off

1. Open your menu by pressing , then scroll using /P or ?/R until you highlight **Key Tone** and press .
2. You'll see the current key tone setting (i.e. **On** or **Off**).
3. Change the key tone on or off using /P or ?/R and press .

Change display contrast

You have a choice of five screen contrast levels.

1. Open your menu by pressing , then scroll using /P or ?/R until you highlight **Display** and press .
2. Scroll using /P or ?/R until you highlight **Contrast** and press .
3. You'll see the current contrast setting (e.g. **4**).
4. Change the contrast setting using /P or ?/R and press .

Change display language

You have a choice of six languages to use on your corded phone: English, German, French, Spanish, Italian and Dutch.

1. Open your menu by pressing , then scroll using or until you highlight **Display** and press .
2. Scroll using or until you highlight **Language** and press .
3. You'll see the current language setting (e.g. **English**).
4. Change the language setting using or and press .

Read number

When this feature is set to **On**: as you enter each number or press a quickdial button to make a call, or when you scroll through your phonebook entries, your redial list or calls list the telephone numbers will be announced to you.

1. Open your menu by pressing , then scroll using or until you highlight **Settings** and press .
2. Scroll using or until you highlight **Read Number** and press .
3. You'll see the current read number setting (e.g. **On**).
4. Change the read number setting using or and press .

Change case

Select a font set (ABC = without special characters / AÀÁÂÃÄÅ = with special characters / ABΓ = Greek / AБBΓ = Cyrillic). This font set will be used for entries in the phonebook.

1. Open your menu by pressing ≡, then scroll using ⌃/P or ?/R until you highlight **Settings** and press ≡.
2. Scroll using ⌃/P or ?/R until you highlight **Change Case** and press ≡.
3. The current setting is marked (e. g. ► **ABC**).
4. Change the case setting using ⌃/P or ?/R and press ≡.

Change System PIN

1. Open your menu by pressing ≡, then scroll using ⌃/P or ?/R until you highlight **Settings** and press ≡.
2. Scroll using ⌃/P or ?/R until you highlight **System PIN** and press ≡.
3. Enter your old PIN and press ≡.
4. Enter your new PIN and press ≡.
5. Enter your new PIN once again and press ≡.

NOTE: If you are sure you want to change the PIN from the default, please keep a note of it since it will not possible to carry out certain functions without it. It is also not possible to recover a lost PIN.

Change date/time

1. Open your menu by pressing , then scroll using or until you highlight **Time** and press .
2. Scroll using or until you highlight **Date & Time** and press .
3. Enter the day, month and year and press .
4. Enter the hours and press .

Change clock hours to 12- or 24-hour format display

1. Open your menu by pressing , then scroll using or until you highlight **Time** and press .
2. Scroll using or until you highlight **Format** and press .
3. You'll see the current time format setting (e.g. **24 hour**).
4. Change the time format using or and press .

For information on dial mode, please go to page 110.
For information on recall, please go to page 110.

Reset to default settings

Note: your phone book, calls and redial lists and any answering machine messages will be deleted if you reset your corded phone to its default settings.

1. Open your menu by pressing (≡), then scroll using ⌂/P or ?/R until you highlight **Reset** and press (≡).
2. Enter the System PIN and press (≡). The corded phone will be reset.

Using your phone book – corded phone

You can store, alphabetically, up to 200 names and their phone numbers in your phone book. To quickly find a phone book entry, simply enter the first letter of the name you've stored.

Note: each phone book entry allows for up to 16 letters for any name and up to 24 digits for any phone number.
Important: please remember to also enter the area code for each phone number you enter in your phone book.

How to use the keypad when using your phone book

You'll see that the keys on your keypad have letters as well as numbers. If you press a chosen key a number of times it'll show you all the numbers and letters it represents.
Here are some keys you may find useful when entering names and phone numbers in your phone book:

- press 1 for a space
- press 1 or 0 for certain special characters
- press ⊗ to delete a number or letter you've entered
- press * to toggle between lower case letters and upper case letters.

Helpline 0844 800 6503 (See page 114 for costs and hours of operation)

Enter a name and number in your phone book

1. Press to open the phone book.
2. If the phone book is empty, the display shows **Empty**.
   If there are entries, the first entry will be shown.
   Press , then scroll using or until you highlight **Add New** and press .
3. Enter the name you want to store and press .
4. Enter the phone number you want to store and press .
5. Scroll using or to choose a ringer melody for this name and number and press .

Edit a phone book entry

1. Press to open the phone book.
2. Scroll using or to find the entry you want to edit and press .
3. Scroll using or until you highlight **Edit** and press .
4. Press to delete characters and use the keypad to enter new ones, then press .

5. Press ⊗ to delete digits and use the keypad to enter new ones, then press ≡.
6. Scroll using ●/P or ?♟/R to choose a ringer melody for this entry and press ≡.

Delete a phone book entry or all entries

1. Press 🕮 to open the phone book.
2. Scroll using ●/P or ?♟/R to find the entry you want to delete and press ≡.
3. Scroll using ●/P or ?♟/R until you highlight **Delete** or **Delete All** and press ≡.
4. Press ≡ to confirm or ■, to cancel.

Copy phone book entries to another phone

Note: you can only copy the phone book to another phone if that phone is registered on your phone system. See page 106.

It's easy to copy:

- a single entry (Copy entry)
- entries not already on the handset you're copying to (Copy append)
- all entries (Copy all)

Important: when you copy all entries to a handset, all existing entries will be deleted. To prevent this from happening you can use the "Copy append mode".

1. Press to open the phone book.
2. Scroll using /P or ?/R to find the entry you want to copy and press .
3. Scroll using /P or ?/R to either **Copy entry**, **Copy append** or **Copy all** and press .
4. Select the handset you want to copy to by pressing or MEMO and press .
5. Pick up the handset you're copying entries to and press B.

Using your quick dial memory – corded phone

You can store a name (max. 16 characters) and telephone number (max. 24 digits) under each of the quick dial memory buttons: M1 , M2 and M3.

Store a quickdial name and number

1. Choose the quick dial button under which you want to store a name and number by pressing either M1 , M2 or M3.
2. Press ☰ twice.
3. Enter the name you want to store using the keypad and press ☰.
4. Enter the phone number you want to store and press ☰.
5. Scroll using ●/P or ?♟/R to choose a ringer melody for this entry and press ☰.

Edit a quick dial entry

1. Choose the quickdial entry you want to edit by pressing either M1 , M2 or M3.
2. Press ☰.
3. Scroll using ●/P or ?♟/R until you highlight **Edit** and press ☰.

Helpline 0844 800 6503 (See page 114 for costs and hours of operation)

4. Press to delete characters and use the keypad to enter new ones, then press .
5. Press to delete digits and use the keypad to enter new ones, then press .
6. Scroll using or to choose a ringer melody for this entry and press .

Delete a quick dial entry

1. Choose the quickdial entry you want to delete by pressing either , or .
2. Press .
3. Scroll using or until you highlight **Delete** and press .
4. You'll see **Delete?** on your display. Press to confirm or to cancel.

Using your calls list – corded phone

Note: you must subscribe to your network provider's Caller Display/Caller ID service for this feature to work. A quarterly fee may be payable.

Incoming call telephone numbers should appear in your calls list. If you have the caller's number stored in your phonebook the name will be displayed instead. A total of 30 incoming calls can be stored in the calls list (16 letters per name and 23 digits per number). The number of new calls received will be shown in the display with the flashing icon. If the number doesn't appear, this is because the caller's identification (Call Line ID) has been withheld by the caller.

You can open and view your calls list by pressing ?/R. To scroll through your calls list simply press /P or ?/R.

Here are some things you may see on your calls list display:

- WITHHELD NUMBER – caller has withheld their number, or this information isn't available
- INTERNATIONA – caller is calling from another country or using an internet service
- PAYPHONE – caller is calling from a public payphone
- OPERATOR – caller is a telephone network operator

Store numbers from your calls list to the phonebook or Quick dial memory (M1, M2, M3)

It's easy to store incoming call numbers to your phone book or quick dial buttons.

1. Press ?/R to open your calls list at the most recent entry.
2. Scroll using /P or ?/R to find the entry you want to store and press .
3. Scroll using /P or ?/R until you highlight **Save to PB** or **M1**, **M2** or **M3** and press .
4. Using your keypad, enter a name for this stored number and press .
5. Edit the number for this name, if needed, and press .
6. Scroll using /P or ?/R to choose a ringer melody for this entry and press .

Delete a single calls list entry

1. Press ?/R to open your calls list at the most recent entry.
2. Scroll using /P or ?/R to find the entry you want to delete and press .

3. Scroll using or until you highlight **Delete** and press .
4. You'll see **Delete?** on your display. Press to confirm or to cancel.

Delete all entries in the call list

1. Press to open your calls list at the most recent entry.
2. Scroll using or until you highlight **Delete All** and press .
3. You'll see **Delete All?** on your display. Press to confirm or to cancel.

Using your menu - cordless handset

Using your menu - cordless handset

For information on your phone book, please go to page 76.
For information on your answering machine, please go to page 86.

User Profiles

You can store 2 different user profiles, each with different settings for the 'Volume', 'Boost' and 'Equaliser' features. You can also personalise each Profile by naming it (Max. 11 letters).

Priority/Default Setting

If you are the main user of this telephone you should change the settings in the menu so that they are just right for you. These settings will be memorised automatically whenever you wish to make or answer a call.
The user profile feature can be used by others in the household whose preferences for volume, boost and equaliser will also be memorised and applied as indicated below.

Change a profile name

1. Open your menu by pressing (A), then scroll using or until you highlight **Profile** and press (B).
2. Scroll using or until you highlight the desired profile and press (B).
3. Scroll using or until you highlight **Name** and press (B).

4. Delete the current name by pressing (A).
5. Enter a new name (up to 11 letters) and press (B).

Change a profile's handset volume

You have a choice of five volume levels.

1. Open your menu by pressing (A), then scroll using or until you highlight **Profile** and press (B).
2. Scroll using or until you highlight the desired profile and press (B).
3. Scroll using or until you highlight **Volume** and press (B).
4. You'll see the current volume level (e.g. 1).
5. Change the volume level using or and press (B).

Change a profile's boost setting

1. Open your menu by pressing (A), then scroll using or until you highlight **Profile** and press (B).
2. Scroll using or until you highlight the desired profile and press (B).
3. Scroll using or until you highlight **Boost** and press (B).
4. You'll see the current boost setting (i.e. **On** or **Off**).
5. Change the boost setting using or and press (B).

Change a profile's tone ('equalizer') setting

1. Open your menu by pressing (A), then scroll using or until you highlight **Profile** and press (B).
2. Scroll using or until you highlight the desired profile and press (B).
3. Scroll using or until you highlight **Equalizer** and press (B).
4. You'll see the current tone setting.
5. Change the tone setting using or and press (B).

Note: press to put the handset back to standby.

Copy a profile

You can easily copy a profile to another registered and compatible PowerTel phone.

1. Open your menu by pressing (A), then scroll using or until you highlight **Profile** and press (B).
2. Scroll using or until you highlight the desired profile and press (B).
3. Scroll using or until you highlight **Copy** and press (B).

4. Scroll using ⟨INT or R⟩ until you highlight the phone (e.g. 0 = Corded phone, 2, 3, 4 or 5) you want to copy the profile to, and press (B).
5. On the phone you're copying the profile to: to confirm, press (B) (cordless handset) or (≡) (corded phone).
   To cancel, press (A) (cordless handset) or (■) (corded phone).

Choosing which profile to use

You need to use a handset to choose a profile to use for a call – you can't choose a profile using handsfree.

Before you answer an incoming call, press the key "Profile setting" on the left hand side of the handset repeated if necessary, depending on which profile you want to use. The display will confirm your choice.

When you want to make a call and before you dial the number, press the key "Profile setting" on the left hand side of the handset repeated if necessary, depending on which profile you want to use. The display will confirm your choice.

Note: once you've selected a profile to use when making a call, you have about 30 seconds to dial the call under that profile before the system will return to its default settings.

Change the handset ringer melody

You have a choice of ten ringer melodies.

1. Open your menu by pressing (A), then scroll using or until you highlight **Handset** and press (B).
2. Ring tone is shown, press (B).
3. Scroll using or until you highlight **External** or **Internal** and press (B).
4. You'll see the melody setting (e.g. 7 [External], 9 [Internal]).
5. Change the melody using or and press (B).

Change the handset ringer volume

You have a choice of five volume levels plus Off.

1. Open your menu by pressing (A), then scroll using or until you highlight **Handset** and press (B).
2. Scroll using to highlight **Ringer volume** and press (B).
3. You'll see the current volume level (e.g. 5).
4. Change the ringer volume using or and press (B).

Change the tone ('equalizer') setting

1. Open your menu by pressing (A), then scroll using or until you highlight **Handset** and press (B).
2. Scroll using or until you highlight **Equalizer** and press (B).
3. You'll see the setting.
4. Change the tone setting using or and press (B).

Note: to adjust tone while you're making a call, press the button to access the equaliser setting. Then press the or button to adjust the setting as shown on the bar-graph on the handset screen.

Boost on

When this feature is set to On the boost function is always activated. The Boost-LED on the top left side of the handset is on whilst on a call, and the boost icon will be shown in the display

You can use the key to switch it off for the recent call. For the next call it will be on again.

If the Boost on-function is set to Off, you will have to switch it on manually by pressing the key. For the next call, the boost function will be off again.

1. Open your menu by pressing (A), then scroll using or until you highlight **Handset** and press (B).
2. Scroll using or until you highlight **Boost on** and press (B).
3. You'll see the current boost memory setting (e.g. Off).
4. Change the setting using or to On or Off and press (B).

Change handset name

1. Open your menu by pressing (A), then scroll using or until you highlight **Handset** and press (B).
2. Scroll using or until you highlight **Handset name** and press (B).
3. Delete the current name by pressing (A).
4. Enter a new name (up to 10 letters) and press (B).

Switch keypad beep on or off

1. Open your menu by pressing (A), then scroll using or until you highlight **Handset** and press (B).
2. Scroll using or until you highlight **Keypad Beep** and press (B).
3. You'll see the key pad setting (i.e. On or Off).
4. Change the key pad beep on or off using or and press (B).

Change contrast

You have a choice of five screen contrast levels so you can set the display to how you find it most easy to read.

1. Open your menu by pressing (A), then scroll using or until you highlight **Handset** and press (B).
2. Scroll using or until you highlight **Contrast** and press (B).
3. You'll see the current contrast setting (e.g. 3).
4. Change the contrast setting using or and press (B).

Switch auto talk on or off

When auto talk's switched on your handset will automatically answer the call when you pick up the handset from its charger base. This is the default setting. If you set it to off you will need to press the button to answer any calls.

1. Open your menu by pressing (A), then scroll using or until you highlight **Handset** and press (B).
2. Scroll using or until you highlight **Auto talk** and press (B).
3. You'll see the current auto talk setting (e.g. On).
4. Change the auto talk setting using or and press (B).

Change backlight timer

You have a choice of 10, 20, 30 or 40 seconds before the backlight timer switches off.

1. Open your menu by pressing (A), then scroll using or until you highlight **Handset** and press (B).
2. Scroll using or until you highlight **Backlight time** and press (B).
3. You'll see the current backlight timing (e.g. 10S).
4. Change the backlight timer setting using or and press (B).

Switch confirmation beep on or off

This is the beep you hear when you change a setting. You can switch the beep on or off.

1. Open your menu by pressing (A), then scroll using or until you highlight **Handset** and press (B).
2. Scroll using or until you highlight **Confirm beep** and press (B).
3. You'll see the current confirmation beep setting (e.g. On).
4. Change the confirmation beep setting using or and press (B).

Helpline 0844 800 6503 (See page 114 for costs and hours of operation)

Select base

You can use this feature if your handset is registered to more than one base.

1. Open your menu by pressing (A), then scroll using or until you highlight **Handset** and press (B).
2. Scroll using or until you highlight **Select base** and press (B).
3. You'll see the current base setting (e.g. Auto or Manual). If Manual is selected then you can choose which of 4 possible bases you wish to log on to.
4. Change the base setting using or and press (B).

Change language

You have a choice of 6 languages to use on your handset: English, German, French, Spanish, Netherlands and Italian.

1. Open your menu by pressing (A), then scroll using or until you highlight **Handset** and press (B).
2. Scroll using or until you highlight **Language** and press (B).
3. You'll see the current language setting (e.g. English).
4. Change the language setting using or and press (B).

Change date/time

1. Open your menu by pressing (A), then scroll using or until you highlight **Time** and press (B).
2. Scroll using or until you highlight **Date and Time** and press (B).
3. Enter the year, month, day, hours and minutes (your handset has a 24-hour clock) and press (B).

Change clock hours to 12- or 24-hour format

1. Open your menu by pressing (A), then scroll using or until you highlight **Time** and press (B).
2. Scroll using or until you highlight **Set time format** and press (B).
3. You'll see the current time format setting (e.g. 24 hour).
4. Change the time format using or to highlight either 12 hour or 24 hour and press (B).

Helpline 0844 800 6503 (See page 114 for costs and hours of operation)

Set alarm

1. Open your menu by pressing (A), then scroll using or until you highlight **Time** and press (B).
2. Scroll using or until you highlight **Set alarm** (your alarm uses a 24-hour clock) and press (B).
3. Select **Once**, **Every Day**, **Mon to Fri** or **Off** and press (B).
4. Enter the time you want your alarm to go off and press (B).
5. Choose your alarm melody and press (B).

To confirm the alarm signal, press (A). Pressing (B) activates the snooze function. With this function the alarm is repeated up to five times after every 5 minutes before it is switched off completely.

Change base (corded phone) ringer melody

You have a choice of 9 base ringer melodies.

1. Open your menu by pressing (A), then scroll or until you highlight **Base settings** and press (B).
2. **Ring tone** is highlighted, press (B).
3. You'll see the ringer melody setting (e.g. 8).
4. Change the ringer melody using or and press (B).

Change base (corded phone) ringer volume

You have a choice of five volume levels plus Off.

1. Open your menu by pressing (A), then scroll using or until you highlight **Base settings** and press (B).
2. Scroll until you highlight **Ringer volume** and press (B).
3. You'll see the current base ringer volume level (e.g. 5).
4. Change the base ringer volume using or and press (B).

For information on dial mode, please go to page 110.

For information on recall, please go to page 110.

Change system PIN code

1. Open your menu by pressing (A), then scroll using or until you highlight **Base settings** and press (B).
2. Scroll using or until you highlight **System PIN** and press (B).
3. Enter your old PIN code (default PIN is 0000) and press (B).
4. Enter your new 4 digit PIN code and press (B).
5. Enter your new PIN code again and press (B).

NOTE: If you are sure you want to change the PIN from the default, please keep a note of it since it will not possible to carry out certain functions without it. It is also not possible to recover a lost PIN.

Appointment

You can enter up to five appointments your telephone should remind you at.

1. Open your menu by pressing (A), then scroll or until you highlight **Tools** and press (B).
2. Scroll using or until you highlight **Appointment** and press (B).
3. Scroll using or until you highlight 1, 2, 3, 4 or 5 and press (B).
4. Scroll using or until you highlight **Edit** and press (B).
5. Delete characters with (A), enter a name for the appointment using the key-pad and press (B).
6. Enter the date using the keypad and press (B).
7. Enter the time using the keypad and press (B).
8. Select a melody with or and press (B).

If you want to edit or delete an appointment select it as described above and make your changes (Edit) or delete the entry (Delete).

Stop watch

The stop watch shows minutes and seconds.

1. Open your menu by pressing (A), then scroll or until you highlight **Tools** and press (B).
2. Scroll using or until you highlight **Stop watch** and press (B).
3. Press (B) to start the stop watch.
4. Press (A) to stop the stop watch.

If you stopped the stop watch you can press [Start] to restart it or [Reset] to reset it.

Reset to default settings

Important: if you reset to default settings all entries in your phone book, calls list and redial list are deleted.

To reset to default settings

1. Press **R** for 10 seconds.
2. Confirm the reset to default settings by pressing (B) for **Yes** or (A) for **No**.

Using your phone book - cordless handset

You can store, alphabetically, up to 200 names and their phone numbers in your phone book. To quickly find a phone book entry, simply enter the first letter of the name you've stored.

Note: each phone book entry allows for up to 16 letters for any name and up to 24 digits for any phone number.

Important: please remember to also enter the area code for each phone number you enter in your phone book.

How to use the keypad when using your phone book

You'll see that the keys on your keypad have letters as well as numbers. If you press a chosen key a number of times it'll show you all the numbers and letters it represents.

Here are some keys you may find useful when entering phone numbers in your phone book:

- press 1 for a space
- enter special characters with 1 or 0
- press A to delete a number or letter you've entered
- press the * key to change from upper case (e.g. ABC) to lower case (e.g. abc)

Note: to enter the same letter twice, simply enter the letter and then wait until the cursor moves to after the letter you've entered, before entering it again.

Enter a name and number in your phone book

1. Open your phone book by pressing (B).
2. Press (B). The display will show **New entry**, press (B) again.
3. Enter the name you want to store and press (B).
4. Enter the phone number you want to store and press (B).
5. Scroll using or to choose a ringer melody for this name and number and press (B).

Edit a phone book entry

1. Open your phone book by pressing (B).
2. Scroll using or to find the entry you want to edit and press (B).
3. The display will show **Edit entry**, press (B) again.
4. Press (A) to delete characters and use the keypad to enter new ones, then press (B).

5. Press (A) to delete digits and use the keypad to enter new ones, then press (B).
6. Scroll using or to choose a ringer melody for this entry and press (B).

Delete a phone book entry or all entries

1. Open your phone book by pressing (B).
2. Scroll using or to find the entry you want to delete or highlight any entry if you want to delete all entries and press (B).
3. Press to display either **Delete** entry or **Delete all** and press (B).
4. Press (B) to confirm or (A) to cancel.

Copy phone book entries to the Corded phone or another registered handset

Note: you can only copy the phone book to another handset if that handset is registered on your phone system. See page 106.

It's easy to copy:

- a single entry (Copy entry)
- entries not already on the handset you're copying to (Copy append)
- all entries (Copy all)

Important: when you copy all entries to a handset, all existing entries will be deleted. To prevent this from happening you can use the "Copy append mode".

1. Open your phone book by pressing B.
2. Scroll using or to find the entry or entries you want to copy and press B.
3. Scroll to either **Copy entry**, **Copy append** or **Copy all** and press B.
4. Scroll to highlight the handset number you want to copy to (e.g. 2 for Handset 2) and press B to confirm.
5. Pick up the handset you're copying entries to and press B.

Using your quick dial memory buttons - cordless handset

You can store a name (max. 16 characters) and a telephone number (max. 24 digits) under each of the quick dial memory buttons: 1, 2 and 3 .

Store a quick dial name and number

1. Choose the quick dial button under which you want to store a name and number by pressing either 1, 2 or 3.
2. Press B. The display will show **Edit entry**, press B again.
3. Enter the name you want to store using the keypad and press B.
4. Enter the phone number you want to store and press B.
5. Scroll using or to choose a ringer melody for this entry and press B. The display will show **Entry saved**.

Edit a quick dial entry

1. Choose the quick dial entry to edit by pressing either 1, 2 or 3.
2. Press B. The display will show **Edit entry**, press B again.

3. Press (A) to delete characters and use the keypad to enter new ones, then press (B).
4. Press (A) to delete digits and use the keypad to enter new ones, then press (B).
5. Scroll using or to choose a ringer melody for this entry and press (B).The display will show **Entry saved**.

Delete a quick dial entry

1. Choose the quick dial entry to delete by pressing either (1), (2) or (3).
2. Press (B). Scroll to **Delete Entry** and press (B).
3. Display will show **Delete Entry?** Press (B) to confirm or (A) to cancel.

Using your calls list - cordless handset

Note: you must subscribe to your network provider's Caller Display/Caller ID service for this feature to work. A quarterly fee may be payable.

Incoming call telephone numbers should appear in your calls list. If you have the caller's number stored in your phonebook the name will be displayed instead. A total of 30 incoming calls can be stored in the calls list (16 letters per name and 23 digits per number). The number of new calls received will be shown in the display with the flashing icon. If the number doesn't appear, this is because either the caller's identification (Call Line ID) has been withheld by the caller, or it is unavailable due to network restrictions.

You can open your calls list by pressing the button. To scroll through your calls list simply press or . To display more information including the date and time of the call, press R.

Here are some things you may see on your calls list display:

- **WITHHELD NUMBER** – caller has withheld their number, or this information isn't available
- **INTERNATIONAL?** – caller is calling from another country or using an internet service
- **PAYPHONE** – caller is calling from a public payphone
- **OPERATOR** – caller is a telephone network operator

Store numbers from your calls list to the phone book

It's easy to store incoming call numbers to your phone book.

1. Press to open your calls list at the most recent entry.
2. Scroll using or to find the entry you want to store and press B.
3. The display will show **Save number**, press B.
4. Using your keypad, enter a name for this stored number and press B.
5. Edit the number for this name, if needed, and press B.
6. Scroll using or to choose the ringer melody for this name and number and press B.

Store numbers from your calls list to a quick dial memory

It's easy to store incoming call numbers to one of the three quick dial memory buttons.

1. Press to open your calls list at the most recent entry.
2. Scroll using or to find the entry you want to store and press B.
3. Scroll using to **Save to M1 / M2 / M3** and press B.
4. Proceed as described above "Store numbers from your calls list to the phonebook".

Delete a single calls list entry

1. Press to open your calls list at the most recent entry.
2. Scroll using or to find the listed call you want to delete and press (B).
3. Scroll until you highlight **Delete**.
4. Press (B) to confirm or (A) to cancel.

Delete all calls list entries

1. Press to open your calls list at the most recent entry and press (B).
2. Scroll until you highlight **Delete all** and press (B).
3. The display will show **Delete all?** Press (B) to confirm or (A) to cancel.

Using your answering machine

Using your answering machine

After you've set up your phone system, follow these easy steps to set up and use your answering machine.

Switch answering machine on or off

To switch your answering machine on and off, simply press on the corded phone. The current answer mode will be announced. When new messages are received, the indicator light on the corded phone will flash. The display also shows the number of messages you have.

Taking a call from the answering machine

If the answering machine has accepted a call yet and you hear the caller speaking his message you can take the call to your phone and talk to the caller.

Lift the handset on the corded phone and talk to the caller.

On the cordless handset press and subsequently , to get the call.

Set the answering machine language

You have a choice of 6 answering machine voice prompt languages: English, German, French, Italian, Spanish and Dutch.

1. Press ≡ to open the menu, scroll using ⌃/P or ?/R until you highlight **Ans Machine** and press ≡.
2. Scroll using ⌃/P or ?/R until you highlight **Language** and press ≡.
3. Choose the language using ⌃/P or ?/R and press ≡.

Adjust the base loudspeaker volume

You can increase or decrease the corded phone's loudspeaker volume using the ▼▲ buttons.

Set the answer mode

Having switched on the answering machine you can select "**Answer & Record**" or "**Answer only**". If you set the answer mode to "**Answer only**" your callers will not be able to leave a message.

1. Switch your answering machine on by pressing ■ on the corded phone.
2. To change the mode between **Answer & Record** and **Answer Only** press and hold ■ for a couple of seconds.
3. To switch off the answering machine, press ■ briefly.

Record your outgoing message

You can change the default answering message to your own. Your outgoing message needs to be under two minutes.

1. Press and hold on the corded phone for a couple of seconds and then record your message after the beep.
2. To stop recording, press . Your outgoing message will be played back to you.

Note: to return your outgoing message to the default message, simply press and hold while the outgoing message is playing.

Check your outgoing message

1. Press briefly. Your current outgoing message is announced.

Set the answer delay

You either choose the number of rings you want before your answering machine answers any incoming call (2-15 rings) or you can choose Time Saver. Time Saver saves you the cost of the call if you're calling in from elsewhere to pick up any messages: if your answering machine answers after 2 rings you have new messages, if it answers after 5 rings you have no new messages. Therefore, you can hang up after 3 rings knowing you have no new messages and you won't be charged for the call.

1. Press to open the menu, scroll using or until you highlight **Ans Machine** and press .
2. Scroll using or until you highlight **AnswerDelay** and press .
3. Change the setting using or and press .

Record a memo

You can record memo messages for yourself or other members of the household which can be played back like normal messages.

1. Press and hold MEMO for a couple of seconds.
2. After the beep record your memo.
3. Press to finish recording.

Listen to messages or memos using the base buttons

Playback is in the order messages or memos were received. New messages are played before old ones. The time and date of each message or memo is announced before playback.

Here are some functions you may find useful:

- to play or pause, press
- to stop, press
- to rewind, press
- to fast forward, press MEMO

Delete a single message or memo

1. Play the message or memo you want to delete by pressing .
2. Press and hold for a couple of seconds during playback of the message or memo to delete it.

Delete all old messages and memos using the base

1. Press and hold for a couple of seconds when no messages are being played.
2. To confirm, press .

Listen to messages or memos using your handset

1. Open the answering machine menu by pressing .
2. **Ans Machine** is displayed, press .
3. Scroll using or to display either **Play New Msgs** or **Play All Msgs** and press .
4. Press to return to standby.

Memory full

Your answering machine will announce if it's full and automatically stop taking any more messages and switch itself to **Answer Only**. You'll need to delete

some of your messages or memos before any new messages can be recorded.

Remote access to your answering machine

You can call your answering machine to hear your messages when you're away from home using most modern phones, including mobile phones.

You need to use a PIN code to access your answering machine. The default code is 000. We suggest you change this for security reasons.

Change PIN

1. Press (≡) to open the menu, scroll using ●/P or ?/R until you highlight **Ans Machine** and press (≡).
2. Scroll using ●/P or ?/R until you highlight **Remote PIN** and press (≡).
3. Enter the old Remote PIN and press (≡).
4. Enter the new Remote PIN and press (≡).
5. Enter the new Remote PIN again and press (≡).

Note: If you change and then forget your remote access code, you can restore the code to it's default by using the Reset procedure. Detailed on page 49. However all data will be lost.

Call in to check messages

NOTE: If you forget to switch on the answering machine it is possible to switch it on remotely. Call in and after 20 rings the "answer only" mode announcement is heard and it is then possible to use the procedures below to switch the machine on.

1. Dial your own phone number from the remote phone and wait until the answering machine picks up the call.
2. Press (*) two times, then enter your 3 digit PIN after the voice prompt.
3. You can manage your messages using your keypad (see remote instructions below)

Note: if you make a mistake entering your PIN three times, your answering machine will hang up and you'll need to call and try again.

Remote access instructions guide

While listening to your messages from a remote location, enter these numbers to manage your messages.

To . . .

Rewind messages, press **1**.

Play or **pause** your messages, press **2**.

Fast Forward through your messages, press **3**.

Hear outgoing message (OGM), press **4**.

Record outgoing message (OGM), press **5**. To end your message, press **6**.

Stop messages, press **6**.

Delete current message, press **7**.

Switch answering machine off, press **8**.

Switch answering machine on to take messages, press **9**.

Delete all old messages, press **0**.

Record a memo, press **#**. To end your message, press **6**.

Helpline 0844 800 6503 (See page 114 for costs and hours of operation)

Using your wrist shaker

Using your wrist shaker

Switch on

Press and hold the ⏻ button for about five seconds. You'll see the green light with the warning triangle come on.

Note: if the light flashes green then red it means your wrist shakereither isn't registered or is out of range. Move closer to your PowerTeltelephone to ensure you are within range. If the light still flashes, see page 104 for registration instructions.

Switch off

Press and hold the button for about five seconds. The green light will go off.

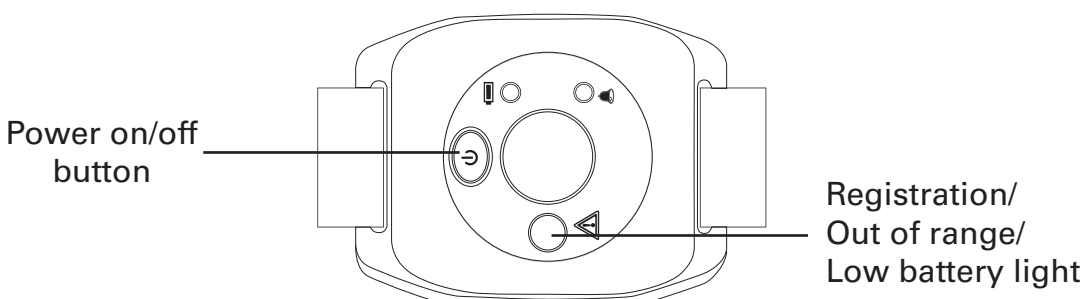

Make sure your wrist shaker is in range

If your wrist shaker is not in range, it won't work. You can tell it's out of range when the large light flashes green and red. If this happens, you need to move closer to your PowerTel phone for your wrist shaker to work.

Battery low

If the battery is low, the large light will turn red and will flash. You need to place the wrist shaker in its charger base for 10 hours to charge the battery.

Incoming calls

When you receive an incoming call, the green light will flash and the wrist shaker will vibrate.

Note: The SOS Motor feature must be turned on for the wrist shaker to vibrate. See page 16 for instructions.

You can answer the call by pressing the large emergency button in the middle of the wrist shaker. You will need to make sure you are within range of your PowerTel phone to do so (see above 'Make sure your wrist shaker is in range'). You cannot speak to your caller via the wrist shaker. Once you've pressed the emergency button on the wrist shaker, your PowerTel phone will answer the call in handsfree mode so that you can speak to your caller via the Powertel phone without picking up the handset.

To end the call, just press and release the emergency button again.

Emergency call

You can program 3 numbers to be dialled in an emergency under the M1, M2 and M3 buttons on your telephone.

Important: under no circumstances should the Emergency services number 999 or 112 be stored as one of your personal emergency numbers.

Storing emergency numbers in the telephone

1. Press the red (M1), (M2) or (M3) button on your telephone where you'd like to store the emergency telephone number. A previously stored number or **M1 Empty** (or M2, M3 as appropriate) is displayed.
2. Press the left hand menu button (≡) under the display.
   Add New or **Edit** is displayed
3. Press the (≡) button again.
4. Using the keypad, enter the name for this telephone number (maximum of 16 characters).

   To enter a character for a name, press the key showing the required letter a number of times eg: for the letter 'B' you would press the **number 2 key** twice. If you need a space, just press the **1 key**.

To enter the same letter twice, press the key to enter the letter, wait until the cursor moves forward one place, then press the key to enter the letter again.

5. Press the ☰ button to save the name.
6. Using the keypad, enter the telephone number, including the full dialling code (maximum of 24 digits).

   If you make a mistake, press the red button on the left hand side ⊗ for each character or digit that you wish to delete.
7. Use the ●/P or ?/R buttons on the central round button to select a ringing melody for the quickdial number.
8. Press the ☰ button to confirm.

SOS message

The PowerTel 980 telephone has a pre-recorded SOS message which you can use, or you can record your own personal emergency message.

The pre-recorded emergency message is: "This is an emergency call. To accept this call press 0."

Record a personal SOS message

When you activate an emergency call each of the numbers stored under the M1, M2 and M3 buttons on your PowerTel 680 telephone are repeatedly dialled in turn until one of the numbers is answered. Your emergency message is then played.

It is very important that in your personal emergency message you include:

- Your name and that the call is an emergency and you need help
- That the person must press '0' on their telephone keypad to accept the emergency call.

1. Press the button and then press the button to scroll to **SOS Message**.
2. Press the button to select.
3. Use the button to scroll to **Record**.

4. Press the button to start recording your message.
   SOS Record is displayed. Remember to speak slowly and clearly whilst facing the telephone.
5. Press the button again to stop the recording. **SOS Play** will be displayed and your message will automatically be played back to you.

Note: if you would like to change your personal message just follow the steps from 1 to 5 above each time.

Listen to your personal SOS message

1. Press the button and then press the button to scroll to **SOS Message**.
2. Press the button to select.
3. **Playback** is displayed. Press the button to select.
4. **SOS Play** is displayed and your message is played back to you.

Delete your personal SOS message

1. When your message is played back to you (as in step 4 on the previous page), press and hold the button.
   The pre-recorded emergency message will now be used.

Activating an emergency call

When you activate an emergency call from your wrist shaker, the PowerTel 980 telephone will go to handsfree mode and will beep for 15 seconds.

You will then hear as each of the emergency numbers you have stored under the M1, M2 and M3 buttons (see page 98) are dialled automatically, one after the other, with intervals of approximately 60 seconds.

The person answering the emergency call will hear the SOS message. When they press the **0 button** on their keypad, they will be able to talk to you via the handsfree on your PowerTel 980 telephone for 3 minutes and the SOS procedure will be terminated and no further calls will be made. If there is no answer or the **0 button** was not pressed by the person answering the call, the next number will be dialled after a further 60 seconds

During the last 10 seconds of this 3 minute call you will hear a warning beep that the call will be disconnected.

If no numbers have been stored under the M1 , M2 or M3 keys on your PowerTel 980 then you will just hear a long continuous tone after the beep tone for 15 seconds and no numbers will be dialled.

If only 1 or 2 numbers have been stored under the M1 , M2 or M3 keys, then the numbers that have been stored will be dialled.

Important: the wrist shaker must be in range of the telephone to be able to make an emergency call.
The battery in the wrist shaker must be charged. An emergency call is not possible if the wrist shaker batteries are flat.
If the emergency message is delivered to an answer phone or voicemail service then the dialing sequence will continue to the next number until such time that the recipient accepts the call by pressing '0' on their telephone.

To activate an emergency call

1. Press and hold the large emergency button in the middle of the wrist shaker for 5 seconds.

To cancel an emergency call

1. Press and hold the large emergency button in the middle of the wrist shaker for 5 seconds.

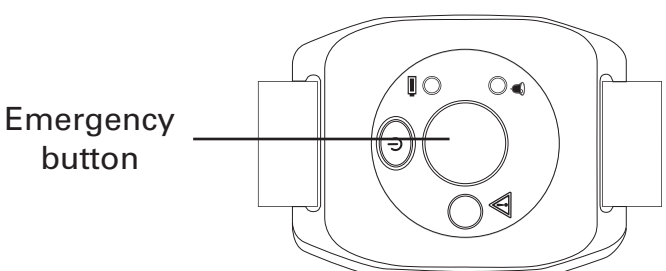

Register your wrist shaker

Important: you will only need to register your wrist shaker if it has become de-registered from the telephone or if you need to register a new wrist shaker.

At the wrist shaker:

1. Turn on the wrist shaker by pressing and holding the button for about five seconds.
2. Press and hold the button again for about 12 seconds, until the registration light flashes green quickly. The wrist shaker will be in registration for about 1 minute.

At the corded phone base:

3. Press and hold the button for at least 10 seconds until **Register** is displayed.
4. You'll know your wrist shaker is registered and ready to use when the registration light unit is a steady green (i.e. it isn't flashing).

Note: the registration light will flash green and red if your wrist shaker either isn't registered or is out of range.

Registering/ deregistering handsets

Registering / deregistering handsets

Register a handset

You only need to register a handset if it has become de-registered from the base or if you've purchased a new handset separately. You can register up to 5 handsets.

Important: make sure any handset you're registering is fully charged before you try to register it.

At the handset:

1. Press and hold (A) for approx 15 seconds until the display shows **Press & Hold Base Page Key**.

At the corded phone:

2. Press and hold (INT) for at least 10 seconds until the display shows **Register**.

Deregister a handset

You may need to deregister a handset if you've too many registered on your phone system, or if the handset develops a fault and needs to be replaced.

To deregister a handset using the corded phone

1. Open your menu by pressing (≡).
2. Scroll using ⌂/P or ?/R until you highlight **Remove HS** and press (≡).
3. Enter the PIN code and press (≡).
4. Enter the handset's internal number (e.g. 2) and press (≡).

To deregister a handset using the cordless handset

Important: You can only cancel subscription of another handset, not the handset you are using to do the remove procedure.

1. Open your menu by pressing (A), then scroll using ⌂ or ? until you highlight **Handset** and press (B).
2. Scroll using ⌂ or ? until you highlight **Registration**, and press (B). Then scroll ⌂ to highlight **De-register** and press (B).
3. Enter the PIN code (default PIN 0000) and press (B).
4. Enter the handset's internal number (e.g. 1) and press (B) to confirm.

Use on a private branch exchange

Use on a private branch exchange

If your phone's on an exchange (e.g. you need to dial 9 to get an outside line), you can transfer calls and use call back by using the **R button**. You'll need to check your private exchange manual to find out which timing to use for your exchange. You can choose two recall timings: 100ms (Short) and 300ms (Long). You have a choice of two dialling modes: tone and pulse. The default setting is TONE and this is the correct setting for use within Europe.

To set the recall time on the corded phone

1. Press ≡ to open the menu, scroll using ⌃/P or ?/R until you highlight **Settings** and press ≡.
2. Scroll using ⌃/P or ?/R until you highlight **Recall** and press ≡.
3. You'll see the current recall timing setting (e.g. **Short**).
4. Choose the recall timing setting you want (**Short** or **Long**) using ⌃/P or ?/R and press ≡.

To set the recall time on the cordless handset

1. Open your menu by pressing A, then scroll using ⌃ or ? until you highlight **Base settings** and press B.
2. Scroll using ⌃ or ? until you highlight **Recall** and press B.

Helpline 0844 800 6503 (See page 114 for costs and hours of operation)

3. You'll see the current recall timing setting (e.g. **Short**).
4. Choose the recall timing setting you want (**Short** or **Long**) using or and press (B).

Insert a dialling pause

If you have to dial a number for an outside line and it takes a while to connect, you can insert a pause so you don't have to wait to hear the dialling tone.
To insert a dialling pause, simply enter the number you usually dial for an outside line and then press (0) for two seconds. A **P** on your display will show dialling pause is active.

Note: you can also insert a dialling pause with a phone number in your phone book.

Using additional services

Your phone should be able to support services such as call waiting and conference calls. You'll need to check with your telephone network provider for further information on these services.

Set the dial mode on the corded phone

1. Press to open the menu, scroll using or until you highlight **Settings** and press .
2. Scroll using or until you highlight **Dial Mode** and press .
3. You'll see the current dial mode setting (e.g. **Tone**).
4. Choose the dial mode setting you want (**Tone** or **Pulse**) using or and press .

Set the dial mode on the cordless handset

1. Open your menu by pressing , then scroll using or until you highlight **Base settings** and press .
2. Scroll using or until you highlight **Dial Mode** and press .
3. You'll see the current dial mode setting (e.g. **Tone**).
4. Choose the dial mode setting you want (**Tone** or **Pulse**) using or and press .

Help and support

Help and support

If you need some help and you're in the UK, please first check and see if your problem can be solved using the troubleshooting guide below. If it can't , please call us on 0844 800 6503 (using a UK landline, at time of going to print: calls cost 6p for connection charge and then 5p a minute. Mobile costs may vary). Lines are open Monday to Friday, 9am to 5pm, excluding public holidays. If you've a claim on your 2-year guarantee, please contact your supplier.

Some issues may simply be resolved by disconnecting the power to the unit. In such instances the power to the base station (corded phone) should be switched off and batteries in the handset should also be removed for about 20 minutes. After which reconnect everything to determine if this has resolved the issue.

Troubleshooting guide

I can't make phone calls

1. Make sure the phone cable is connected properly. If it is, there may be a fault. Please make sure you're using the phone cable that came with your phone.
2. Check power's plugged in, switched on and working.
3. Make sure you aren't too far from the base/corded phone (in ideal conditions, it should work up to 300 metres outdoors and up to 50 metres indoors).
4. Test the phone line and socket by using another phone.

I keep losing my connection

1. Make sure you aren't too far from the base/corded phone (in ideal conditions, it should work up to 300 metres outdoors and up to 50 metres indoors).
2. The base/corded phone may not be in an ideal location – consider moving it.

I keep getting a double beep from the handset at random intervals.

1. Check the batteries are full charged.
2. It may be caused by interference. Make sure that both Handset and base are not adjacent to other electronic equipment.
   Try moving the base station to another location.

My handset keeps switching off

1. It may need recharging. So it can charge fully, place your handset on its charger base for at least 16 hours (make sure the power socket is switched on!).
2. Replace the rechargeable batteries. Any replacement batteries should be the same type as those provided.

When I have called an automated service which requests me to press certain digits, there is no response.

The dial mode may be set to "PULSE" instead of "TONE". Change it to the correct mode as described on page 112.

The phone system isn't responding

You may need to reset to default settings. Please see page 75.

Caller's identification (Call Line ID) isn't working

1. Check you have this service on your phone line. Please call your network provider.
2. The caller may have withheld their phone number.

My handset or base doesn't ring

Check that the ringer is on. See pages 30, 64 and 72.

I've got a buzzing noise on my radio, TV or computer

We suggest you use your cordless handset at least one metre away from electrical equipment and mobile phones.

There is interference in the earpiece and/or internet connection is very slow when using the phone

You must plug the phone into the wall socket via an ADSL filter if you have broadband internet on your phone line.

My answering machine won't record messages or memos

1. Check that your answering machine is connected and switched on.
2. Answering memory may be full. See page 91.

My remote access isn't working

1. Check you're using the correct PIN. See page 92.
2. Make sure you're using a touchtone phone.

The white light on the corded phone is constantly flashing
You have new answering machine message(s).

Press the button to listen to them and the flashing will stop.

1. **I have been told by a caller that they had left a message but there are no messages on my answering machine.**
2. **I have been told by a caller that they heard a message that my "Mail box is full"**

Check if you have a network based answering system such as "call minder" or "1571" on your line by dialling 1571. If you have such a service you should consider asking your network provider to remove it.

General information

Safety information

Please make sure you read this User Guide carefully.

Intended use

This phone is suitable for use on either a public telephone network or an approved Private exchange (PABX). Any other use is considered unintended use. Unauthorised modification or reconstruction isn't permitted. Do not open the device and attempt any repair work yourself.

Phone location

Make sure your phone:

- is on a dry, flat and stable surface
- isn't a trip hazard with its power cable
- is at least one metre from other electrical appliances
- isn't exposed to smoke, dust, vibration, chemicals, moisture, heat and direct sunlight.

Please take care that the power supply isn't obstructed by furniture.

Power supply

Important: use only the power adapters supplied with your PowerTel 980.

Power failure can affect your phone and equipment. This telephone cannot be used to make calls in the event of a power failure. Alternative arrangements should be made for access to emergency services.

Energy efficient power adapter

The included mains adapters meet the eco-design requirements of the European Union (Directive 2005/32/EG). Thus, its power consumption is considerably lower, both in operated as well as in non-operated mode, compared with the mains adapter of previous design.

Medical equipment

Do not use your phone:

- near emergency or intensive care medical equipment
- during an electrical storm

It is recommended that if you have a pacemaker fitted you check with a medical expert or your health adviser before using this product.

Rechargeable batteries

Do not throw the batteries into a fire or water.

Hearing aid compatibility

You phone works with most popular hearing aids. However, given the wide range of hearing aids available, we can't guarantee that your phone will function fully with every hearing aid.

Important: your phone can produce very high sound when Boost is switched on. Please take care if the handset is used by others.

Disposal

In order to dispose of your device, take it to a collection point provided by your local public waste authorities (e.g. recycling centre). According to laws on the disposal of electronic and electrical devices, owners are obliged to dispose of old **electronic and electrical devices** in a separate waste container.
The adjacent symbol indicates that the device must not be disposed of in normal domestic waste!

Batteries represent a hazard to both health and the environment!
Never open, damage or swallow batteries, nor allow them to get into the environment.
They may contain toxic and ecologically hazardous heavy metals. You are legally obliged to dispose of batteries at the point of sale or at appropriate collection points provided by your local public waste authorities. Disposal is free of charge. The adjacent symbols indicate that

batteries must not be disposed of in normal domestic waste and but at authorised collection points.
Packaging materials must be disposed of according to local regulations.

Technical details

Standard	DECT[1] GAP[2]
Power supply (corded phone)	Input: 100-240V 50/60Hz Output: 6VDC 800mA
Power supply (charger base)	Input: 100-240V 50/60Hz Output: 7VDC 420mA
Range	Outdoors approx. 300m, Indoors approx. 50m
Standby	Up to 100hrs
Maximum Talk Time	Up to 10hrs
Maximum earpiece volume	+40 dB (distortion < 1,5 %)
Rechargeable batteries	AAA 1.2V 750mAh NiMH
Dialling mode	Tone (DTMF) / Pulse
Recall time (Flash)	Short (100 ms) / Long (300 ms)
Optimum ambient temperature	0˚C to 45˚C
Optimum relative humidity	20% to 80%

[1] DECT: Digital Enhanced Cordless Telecommunication = standard for cordless phones.
[2] GAP: Generic Access Profile = standard for the operation of handsets and base stations from different manufacturers.

Default settings

To reset to default settings, please see page 75.

Cordless handset default settings

Language	English
Handset name	POWERTEL
Ringing melody (external/internal)	7 / 9
Ringing volume	5
Keypad beep	On
Auto talk	On
Contrast	3
Backlight time	10 s
Boost on	Off
Recall time	Short (100 ms)
Dialling mode	Tone
PIN code	0000

Corded phone

Language	English
Answer mode	Answer and record
PIN code for remote access	000
Answer delay	3
Time format	24 hours
Ringing melody (external/internal)	8 / 9
Ringing volume	5
Keypad beep	On
Contrast	4

Boost	Off
Recall time	Short (100 ms)
Dialling mode	Tone

Maintenance and guarantee

Maintenance

- Please clean your equipment's surfaces with a soft, fluff-free cloth.
- Never use cleaning agents or solvents.

Guarantee

AMPLICOMMS equipment is produced and tested according to the latest production methods. The implementation of carefully chosen materials and highly developed technologies ensure trouble free functioning and a long service life. The terms of the guarantee do not apply where the cause of the equipment malfunction is the fault of the telephone network operator or any interposed private branch extension system. The terms of the guarantee do not apply to the rechargeable batteries or power packs used in the products. The period of guarantee is 24 months from the date of purchase.
All deficiencies resulting from material of production faults which occur during the period of guarantee will be eliminated free of charge. Rights to claims under the terms of guarantee are annulled following intervention by the purchaser or third parties. Damage caused as a result of improper handling or operation, in-

correct positioning or storing, improper connection or installation, Acts of God or other external influence are not covered by the terms of guarantee.
In the case of complaints, we reserve the right to repair or replace defect parts or provide a replacement device. Replacement parts or devices become our property.
Rights to compensation in the case of damage are excluded where there is no evidence or intent or gross negligence by the manufacturer.
If your equipment shows signs of defect during the period of guarantee, please return to the sales outlet in which you purchased the AMPLICOMMS equipment together with the purchase receipt. All rights to claims under the terms of guarantee in accordance with this agreement must be asserted exclusively with regard to your sales outlet.
Two years after the purchase of our products, claims under the terms of guarantee can no longer be asserted.

Declaration of conformity

This device fulfils the requirements stipulated in the EU directive:
1999/5 EU directive on radio equipment and telecommunications terminal equipment and the mutual recognition of their conformity.
Conformity with the above mentioned directive is confirmed by the CE symbol on the device.
To view the complete Declaration of Conformity, please refer to the free download available on our website **www.amplicomms.com**

Index

A

Alarm 71
Answer delay 89
Answer mode 87
Appointment 74
Auto talk 67

B

Backlight 68
Base loudspeaker volume 87
Base ringer 72
Basic guide 20
Belt clip 13
Boost 28, 40, 44, 61, 65
Box contents 10

C

Call back 26
Call in to check messages 93
Call length 29
Calls list 56, 82
Change Case 47
Change PIN 92
Charge your handset 13
Clock hours format 70
Conference call 33
Confirmation beep 68
Connect your charger base 12
Connect your corded phone 11
Contrast 45, 67

D

Date/time 48, 70
Declaration of conformity 126
Default settings 75, 124
Delete a single message 91
Delete all old messages 91
Dial mode 112
Dialling pause 111
Display icons 17
Disposal 122

E

Earpiece volume 28
Emergency call 98
End a call 24
Equalizer 28, 40, 62, 65

F

Find handset 34

G

Getting started 10
Guarantee 125

H

Handset name 66
Handset ringer 30, 64
Handsfree 29
Headset 30
Hearing aid 122
Help 114

I

Install your batteries 12
Intended use 120
Internal call 31

K

Key Tone 45
Keypad Beep 66

L

Language 46, 69, 86
Listen to messages 90, 91
Lock the keypad 30

M

Maintenance 125
Make a call 24
Medical equipment 121
Memo 90
Memory full 91
Messages 90
Mute 30

O

Outgoing message 88

P

Phone book 27, 50, 76, 83
Phone location 120
PIN code 73
Power failure 35
Power supply 121
Private branch exchange 110
Profile name 38, 60

Q

Quick dial 27, 54, 57, 80, 83

R

Range of the wrist shaker 97

Read Number 46
Recall time 110
Rechargeable batteries 121
Record a memo 90
Record a personal ringer melody 43
Record your outgoing message 88
Redial 25
Remote access 92
Remote access instructions guide 94
Reset 49, 75
Ringer melody 42
Ringer volume 44

S

Safety information 120
Select base 69
Set the answering machine language 86
Setting the tone 28
SOS message 100
SOS Motor 16
Stop watch 75
Storing emergency numbers in the telephone 98
Support 114
Switch answering machine on or off 86
Switch your wrist shaker on 15
System PIN 47, 73

T

Take a call 25
Taking a call from the answering machine . 86
Technical details 123
Time format 48
Transfer an external call 32
Troubleshooting 114

U

User Profiles 38, 60

V

Volume 39, 61

W

Wrist shaker 13, 96

amplicomms

Distributed by: Audioline GmbH, D-41460 Neuss
February 12 – ISSUE 1.0

CE