Issued by
Siemens Home and Office Communication Devices GmbH & Co. KG
Schlavenhorst 66
D-46395 Bocholt

© Siemens Home and Office Communication Devices GmbH & Co. KG 2006
All rights reserved. Subject to availability.
Rights of modification reserved.

www.siemens.com/gigaset

SIEMENS

# Gigaset
## E365

# The handset at a glance

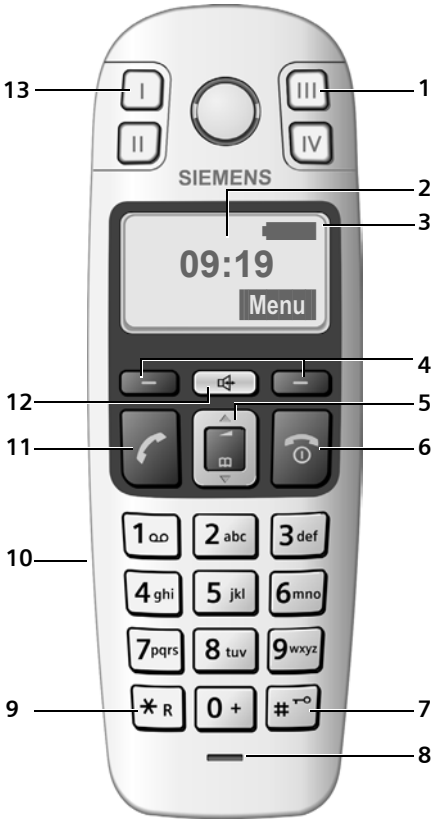


1 Direct dialling keys (II to IV)
2 **Display** in idle status (example)
3 **Battery charge level**
(1/3 charged to fully charged)
flashes: battery almost flat
flashes: battery charging
4 **Display keys** (page 15)
5 **Control key** (page 14)
6 **End call key, On/off key**
End call, cancel function, go back one menu level (press briefly), back to idle status (press and hold), activate/deactivate handset (press and hold in idle status)
7 **Hash key**
Keypad lock on/off (press and hold in idle status, page 14)
Insert a pause (press and hold for dialling)
Switch between uppercase/lowercase letters and digits for text entry (page 39)
8 **Microphone**
9 **Recall key**
Enter flash (press and hold)
10 **Connection socket for headset** (page 40)
11 **Talk key**
Answer a call, start dialling
12 **Handsfree key**
Toggle between earpiece and handsfree mode
Lights up: handsfree activated
Flashes: incoming call
13 Direct dialling/SOS key with SOS LED

# E365 base station at a glance

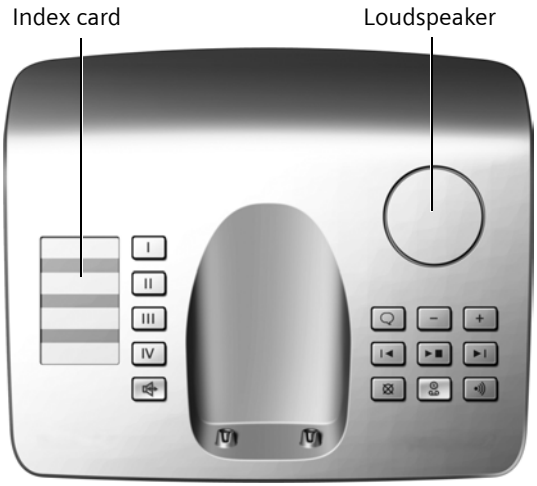


[I] **Direct dialling/SOS key** with SOS LED (see page 17)

[II] … [IV] **Direct dialling keys** (see page 17)

[📢] **Handsfree key:**answer/end a call

[📡] **Registration/paging key**:
- Page handsets (press briefly, "Paging", page 30).
- Register handsets (press and hold, page 29).

## Answering machine keys

[⏺] **On/off key**: activate and deactivate answering machine.
- **Lights up:** answering machine is activated.
- **Flashes:** there is at least one new message or message is in the process of being recorded.
- **Flickers for about four seconds:** memory is full.

[▶■] **Playback/Stop key**: Play back messages from the answering machine or cancel playback.

[▶|] **Forward key**: Skip to next message.

[|◀] **Back key**: Skip to previous message.

[⊠] **Delete key**: Delete the current message during message playback or all old messages in idle status.

[💬] **Announcement key:** Record, play back and delete a personal announcement.
- press and **hold**: record announcement. Press again to end recording.
- press **briefly**: play back announcement.

Delete announcement during playback, if required, with [⊠].

[−] [+] **Volume keys**: adjust volume ([−] = quieter; [+] = louder)
- **During message playback:** adjust loudspeaker volume.
- **While an external call is being signalled:** adjust ringtone volume.

**Please remember:**
- If the answering machine is being operated from a handset or if it is recording a message, it cannot be operated from the base station.
- If the on/off key flashes although the answering machine is switched off, there is still at least one new message on the answering machine that has not been played back yet.

# Contents

**The handset at a glance . . . . . 1**

**E365 base station at a glance . . . 2**

**Safety precautions . . . . . 5**

**Special features of the Gigaset E365 . . . . . 6**

**SOS mode . . . . . 6**

**Gigaset E365 – more than just a telephone . . . . . 8**

**First steps . . . . . 8**
Pack contents . . . . . 8
Installing the base station . . . . . 8
Connecting the base station . . . . . 8
Setting up the handset for use . . . . . 9

**Menu tree . . . . . 11**

**Making calls . . . . . 13**
Making an external call/ ending a call . . . . . 13
Answering a call . . . . . 13
Calling line identification . . . . . 13
Handsfree operation . . . . . 14

**Operating the handset . . . . . 14**
Switching the handset on/off . . . . . 14
Activating/deactivating the keypad lock . . . . . 14
Control key on the handset . . . . . 14
Display keys . . . . . 15
Returning to idle status . . . . . 15
Menu guidance . . . . . 15
Correcting incorrect entries . . . . . 15

**Using the directory, direct dialling keys and lists . . . . . 16**
Directory . . . . . 16
Direct dialling and SOS keys . . . . . 17
Last number redial list . . . . . 19
Opening the message list with the display key . . . . . 19

**Automatic network provider code (preselection) . . . . . 21**

**SMS (text messages) . . . . . 22**
Writing/sending an SMS . . . . . 22
Receiving an SMS . . . . . 23
Setting up the SMS centre . . . . . 24
SMS to a PABX . . . . . 24
Activating/deactivating the SMS function . . . . . 25
SMS troubleshooting . . . . . 25

**Operating the base station answering machine . . . . . 26**
Operation via the handset . . . . . 26
Activating/deactivating call screening . . . . . 28
Setting up the answering machine . . . 28
Resetting speed dialling on the answering machine . . . . . 28

**Using the network mailbox . . . 29**
Using the network mailbox for setting speed dialling . . . . . 29

**Using several handsets . . . . . 29**
Registering handsets . . . . . 29
Locating a handset ("Paging") . . . . . 30
Making internal calls . . . . . 30
Listening in to an external call . . . . . 31

**Handset settings . . . . . 31**
Changing the display language . . . . . 31
Screensaver . . . . . 31
Auto answer . . . . . 31
Adjusting the loudspeaker volume . . . 32
Changing ringtones . . . . . 32
Activating/deactivation suppression of the first ringtone . . . . 32
Advisory tones . . . . . 32
Using the handset as an alarm clock . 33
Restoring the handset default settings . . . . . 33

**Base station settings . . . . . 33**
Changing the system PIN . . . . . 33
Changing ringtones . . . . . 34
Restoring the base station to factory settings . . . . . 34

**Operating the base station on the PABX . . . . . 34**

**Appendix . . . . . 35**
Symbols and typographical conventions used . . . . . 35
Care . . . . . 35
Contact with liquid . . . . . 35
Questions and answers . . . . . 35
Service (Customer Care) . . . . . 36
Authorisation . . . . . 37
Technical data . . . . . 37
Guarantee Certificate United Kingdom . . . . . 38
Writing and editing a text message . . 39

**Accessories . . . . . 40**

**Wall mounting for base station . . . . . 40**

**Index . . . . . 41**

# Safety precautions

**Caution:**
Read the safety precautions and the user guide before use.
Explain their contents to your children as well as the potential hazards associated with using the telephone.

Only use the mains adapter supplied, as indicated on the underside of the base station.

Only fit the **recommended rechargeable batteries** of the same type (page 37)! In other words, do not use any other battery type or non-rechargeable batteries as this could result in significant health risks and personal injury.

Fit rechargeable batteries with the correct polarity and use them according to this user guide (polarity symbols can be seen in the handset's battery compartment, page 9).

The operation of medical appliances may be affected. Be aware of the technical conditions in your particular environment, for example doctor's surgery.

Do not hold the reverse side of the handset to your ear if the handset is ringing or if the handsfree function is switched on. Otherwise, you risk developing serious, permanent hearing damage.

The handset may cause an unpleasant humming noise in hearing aids.

Do not install the base station in bathrooms or shower rooms. The handset and base station are not splash proof (page 35).

Do not use the phone in environments with a potential explosion hazard, for example auto paint shops.

If you give your Gigaset to someone else, make sure you also give them the user guide.

All electrical and electronic products should be disposed of separately from the municipal waste stream via designated collection facilities appointed by the government or the local authorities.

This crossed-out wheeled bin symbol on the product means the product is covered by the European Directive 2002/96/EC.

The correct disposal and separate collection of your old appliance will help prevent potential negative consequences for the environment and human health. It is a precondition for reuse and recycling of used electrical and electronic equipment.

For more detailed information about disposal of your old appliance, please contact your local council refuse centre or the original supplier of the product.

**Please note:**
Not all of the functions described in this user guide are available in all countries.

# Special features of the Gigaset E365

- Large keys
- Text and symbols are shown clearly in large type on the display
- Jumbo Font
- SOS mode
- Direct dialling keys
- Internal calls between handset and base station
- Voice prompted answering machine
- Compatibility with hearing aids (HAC – Hearing Aid Compatibility)
- Connection for headset (headset not included in scope of delivery)
- Index card for labelling the SOS/direct dialling keys (reverse side of user guide)

# SOS mode

Your Gigaset E365 is equipped with a special **SOS function** or SOS procedure. You can use this SOS procedure to request assistance in case of emergency. You can store up to **four SOS numbers**.

The SOS numbers can be stored on the **SOS/direct dialling key I**. In case of an emergency, you then only have to press the **direct dialling key I**. The SOS procedure is initiated when you press this key.

The SOS procedure automatically dials the first SOS number you entered. If this number is busy or if the person called is not at home, the SOS procedure automatically dials the next SOS number.

In order to use the SOS procedure, you have to first program the **SOS/direct dialling key I** and activate **SOS mode** (page 17).

| | |
|---|---|
| *i* | When SOS mode is activated, the SOS LED lights up permanently in the SOS key on the handset and base station! |

## SOS procedure

The way the SOS procedure operates is described below.

Press the SOS/direct dialling key [I] on the **base station** and the device **dials immediately**.

You have to **press and hold** the SOS/direct dialling key [I] on the **handset** to **launch the function immediately**.
If you just press the key briefly and don't hold it down, you have to confirm with **Yes** to prevent an emergency call from being initiated inadvertently.

▼

The first SOS number is dialled as soon as you press the SOS direct dialling key. At the same time, the message "*Sending emergency call*" is played back via the loudspeaker.

▼

If the SOS call is answered, the callee automatically first hears the message *"This is an emergency call"*. Your name is then played back after this message. You must have programmed the SOS key accordingly in order for your name to be announced (see page 17). This is followed by the message *"To accept the call please press 5"*. If the callee now presses key 5, you can converse with one another.

▼

If the callee does not answer the call, for example because s/he is not at home or his/her answering machine is switched on, the SOS procedure automatically dials the next SOS number. The SOS procedure switches automatically to the next SOS number after 60 seconds in the following cases:

- The call is not answered
- The answering machine for the selected SOS number is switched on
- The SOS number is busy

▼

The procedure is repeated at most four times. If none of the calls is answered, the SOS procedure is ended with an error tone.

Recipients of the emergency call must have set their telephones to tone dialling as otherwise confirmation of the SOS call with key 5 will not be recognized.

***i***

- During the entire procedure, all SOS keys flash on all registered handsets and on the base station. The message *"Sending emergency call"* is issued on the handset that triggered the emergency call.
- If an internal call is programmed additionally, the SOS call can also be answered by an internal user. The text *"Emergency call"* is output on all registered handsets and the base station.
- You should perform a test run of the SOS procedure to ensure that SOS mode is programmed correctly. The police, rescue services or fire brigade must not be used for a test run.
- Please note that the standby time of the handset will be reduced when SOS mode is activated.
- The SOS LED lights up permanently when SOS mode is activated!

# Gigaset E365 – more than just a telephone

Your phone not only enables you to send and receive text messages over the fixed network and store up to 100 telephone numbers (page 16) – it can do a whole lot more:

- You can programme the direct dialling keys of your phone with important phone numbers. The number is then dialled by simply pressing a key (page 17).
- Use the handsfree function (page 14) to keep your hands free when making a call.
- Use your handset as an alarm clock (page 33).

**Have fun using your new telephone!**

# First steps

## Pack contents

The packaging contains a Gigaset E365 base station, a Gigaset E36 handset, a mains adapter, a telephone cable, two batteries, a battery cover, a belt clip and a user guide.

## Installing the base station

The base is designed to be operated in enclosed, dry areas at temperatures ranging from +5 °C to +45 °C.

Set up the base station at a central point in the apartment or house.

Please refer to the end of the user guide for information on wall-mounting the base station.

**Please remember:**

- Never expose the telephone to heat sources, direct sunlight, other electrical appliances.
- Protect your Gigaset from moisture, dust, corrosive liquids and vapours.

## Connecting the base station

▶ **First** connect the mains adapter and **then** the phone jack as shown below and place the phone cord in the cord recess.

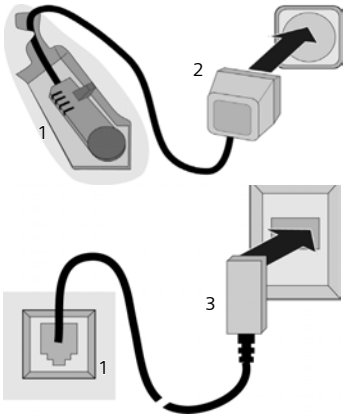


1 Underside of the base (section)
2 Mains adapter 230 V
3 Phone jack with phone cord

**Please remember:**

- Keep the mains adapter **plugged in at all times** for operation as the phone does not work without mains connection.
- If you buy a replacement phone cord from a store ensure that the phone jack is connected correctly.

**Correct phone jack assignment**

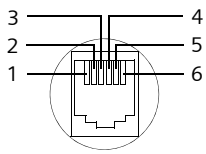


1 unused
2 unused
3 a
4 b
5 unused
6 unused

# Setting up the handset for use

## Fitting the batteries and closing the cover

**Caution:**
Use only the rechargeable batteries recommended by Siemens on page 37. Never use a conventional (non-rechargeable) battery or other battery types as this could result in significant health risks and personal injury. For example, the batteries could explode. The phone could also malfunction or be damaged as a result of using batteries that are not of the recommended type.

- Fit the batteries with the correct polarity (see diagram).

The polarity is indicated in the battery compartment.

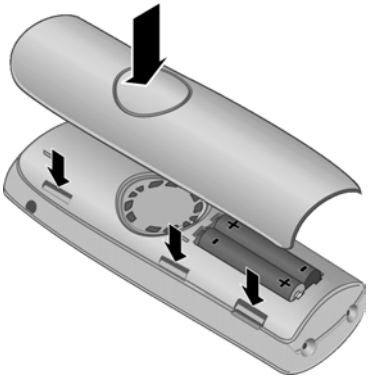

- First align the notches on the side of the battery cover with the protrusions of the inside of the casing.
- Then press down the cover so that it clicks into place.

### Attaching the belt clip

There are notches for attaching the belt clip on the side of the handset at the same height as the display.

- Press the belt clip onto the back of the handset so that the protrusions on the belt clip engage with the notches.

You can also attach a cord for carrying the handset in your hand or wearing it around your neck.

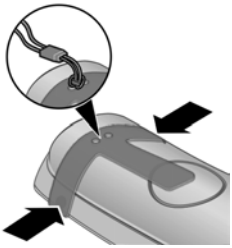

### Opening the battery cover

- If fitted, remove the belt clip.
- Reach into the housing cavity and pull the battery cover upwards.

## Placing the handset in the base station and registering

**Requirement:** the handset must not already be registered on **any** base station.

Registering the handset on the Gigaset E365 base station occurs automatically.

- Place the handset in the charging cradle of the base station with its **display facing forward**.

You will hear a confirmation tone.

Automatic registration can take up to 5 minutes. While registration is in progress the screen displays **Registering** . The handset is assigned the lowest unassigned internal number (1–4). If several handsets are registered on the base, the internal number is shown in the display after registration, for example **2**. This means that the handset has been assigned the internal number 2.

**Please note:**
- Automatic registration is only possible if the base station on which you wish to register the handset is not being used to make a call.
- A key press cancels automatic registration.
- If four handsets are already registered on the base station there are two options:
  - The handset with the internal number 4 is in idle status: the handset you wish to register is assigned the number 4. The handset that was previously number 4 is de-registered.
  - The handset with the internal number 4 is being used: the handset you wish to register cannot be registered.
- If automatic registration does not work the handset will have to be registered manually (page 29).

▸ To charge the batteries, leave the handset in the charging cradle on the base station.

**Please note:**
- The handset may only be placed in the base/charging cradle provided for it.
- If the handset has switched itself off because the batteries are flat and is then placed in the base/cradle, it will switch itself on automatically.

For questions and problems see page 35.

## Initial charging and discharging of batteries

Battery charging is indicated in the top right of the display by a flashing battery icon, or . During handset operation, the battery icon indicates the charge status of the batteries (page 1).

The correct charge status can only be displayed when the batteries are first fully charged **and** discharged through use.

▸ To do this, leave the handset in the base without interruption until the battery icon stops flashing in the display (approx. 6h).

▸ Once the batteries are fully charged, remove the handset from the base and do not put it back again until the batteries are fully discharged.

**Please note:**
After the first battery charge **and** discharge you may replace your handset in its base after every call.

**Please remember:**
- Always repeat the charging and discharging procedure if you remove the batteries from the handset and re-insert them.
- The batteries may warm up as they are charging. This is not dangerous.
- After a time the charge capacity of the batteries will decrease for technical reasons.

**Please note:**
You will find explanations for the symbols and typographical conventions used in this user guide in the appendix, page 35.

## Setting the date and time

Menu ➔ Settings ➔ OK ➔ Date/Time ➔ OK

Enter the day, month and year with 6 digits and press OK. Use ▲▼ to move between the fields.

Enter hours and minutes with 4 digits (e.g. 0 7 1 5 for 07.15 hrs) and press OK. Use ▲▼ to move between the fields.

**Once the phone is registered and the time set, the idle display looks as shown on page 1.**

**Your phone is now ready for use.**

The answering machine is set with a standard announcement.

# Menu tree

There are two ways to select a function:

### Using number combinations ("shortcut")

- To open the main menu, press Menu with the handset in idle status.
- Enter the number combination that is in front of the function in the menu tree.
- **Example:** Menu 6mno 3def for "Set handset language".

### Scrolling through the menus (see also page 35)

- To open the main menu, press Menu with the handset in idle status.
- Scroll to the required function with the control key and press OK.

**1 Directory**

**2 Calls**

**3 SMS**

| | | | | | |
|---|---|---|---|---|---|
| 3-1 | Write Message | | | | |
| 3-2 | Incoming 00+00 | | | | |
| 3-3 | Outgoing | | | | |
| 3-4 | Settings | 3-4-1 | Service Centres | 3-4-1-1 | Service Centre 1 |
| | | | | ... | [to] |
| | | | | 3-4-1-3 | Service Centre 3 |
| | | 3-4-2 | Subscribe SMS | | |

**4 Alarm**

| | |
|---|---|
| 4-1 | Activation |
| 4-2 | Wakeup time |

**5 Audio Settings**

| | | | |
|---|---|---|---|
| 5-1 | Handset Volume | | |
| 5-2 | Handsfree Volume | | |
| 5-3 | Ringer Volume | | |
| 5-4 | Ringer Melody | 5-4-1 | External Calls |
| | | 5-4-2 | Internal Calls |
| | | 5-4-3 | Alarm Clock |
| 5-5 | Advisory Tones | | |
| 5-6 | Battery Low | 5-6-1 | Off |
| | | 5-6-2 | On |
| | | 5-6-3 | During Call |
| 5-7 | Headset Volume | | |

## 6 Settings

| | | | | | |
|---|---|---|---|---|---|
| 6-1 | Date/Time | | | | |
| 6-2 | Direct Diall. Keys | | | | |
| 6-3 | Language | | | | |
| 6-4 | Jumbo Font | | | | |
| 6-5 | Emergency Call Mode | | | | |
| 6-6 | Emergency Numbers | | | | |
| 6-7 | Handset | 6-7-1 | Screen Saver | | |
| | | 6-7-2 | Auto Answer | | |
| | | 6-7-3 | Register Handset | | |
| | | 6-7-4 | Reset Handset | | |
| 6-8 | Base | 6-8-1 | Audio Settings | 6-8-1-1 | Loud Speaker |
| | | | | 6-8-1-2 | Ringer Volume |
| | | | | 6-8-1-3 | Ringer Melody |
| | | 6-8-2 | System PIN | | |
| | | 6-8-3 | Base Reset | | |
| | | 6-8-4 | Listening in | | |
| | | 6-8-5 | Preselection | 6-8-5-1 | Preselect Number |
| | | | | 6-8-5-2 | With Preselect |
| | | | | 6-8-5-3 | Without Preselect |

## 7 Voice Mail

| | | | |
|---|---|---|---|
| 7-1 | Set Key 1 | 7-1-1 | Network Mailbox |
| | | 7-1-2 | Answer Machine |
| 7-2 | Answer Machine | | |
| 7-3 | Call Screening | 7-3-1 | Handset |
| | | 7-3-2 | Base |
| 7-4 | Announcements | 7-4-1 | Record Announce. |
| | | 7-4-2 | Play Announce. |
| | | 7-4-3 | Delete Announce. |
| 7-5 | Message Length | 7-5-1 | Maximum |
| | | 7-5-2 | 30 sec |
| | | 7-5-3 | 60 sec |
| | | 7-5-4 | 120 sec |
| 7-6 | Ring Delay | 7-6-1 | Immediately |
| | | 7-6-2 | 10 sec |
| | | 7-6-3 | 20 sec |
| | | 7-6-4 | 30 sec |
| | | 7-6-5 | Auto |

# Making calls

## Making an external call/ ending a call

External calls are calls using the public telephone network.

(Enter phone number) ➜ [✆].

The number is dialled. (You can also **first** press the [✆] key [ringtone] and then enter the number.) The earpiece volume can be adjusted during the call with the [▲] key.

**End a call/cancel dialling:**
Press the end call key [⏻] or place the handset in the base station or charging cradle.

## Answering a call

The handset indicates an incoming call in three ways: by ringing, by a display on the screen and by the flashing handsfree key [🔊].

You can answer the call by:

- Pressing the talk key [✆].
- Pressing the handsfree key [🔊].
- Press the display key **Accept**.

If the handset is in the base and the **Auto Answer** function is activated (page 31), the handset will answer a call automatically when you lift it out of the base.

If the ringtone is intrusive, press **Silence**. The ringtone is switched off for this call. You can answer the call so long as it is displayed on the screen.

## Calling line identification

When you receive a call, the caller's number is displayed on the screen if the following conditions are met:

- Your network provider supports CLIP, CLI:
  - CLI (calling line identification): the caller's number is transmitted
  - CLIP (calling line identification presentation): the caller's number is displayed
- You have arranged CLIP with your network provider.
- The caller has arranged CLI with the network provider.

### Displaying the caller's number

The phone number of the caller is shown on the display or also the name of the caller if the name has been stored in the directory.

**Requirements:**

1. You have arranged with your network provider to have the phone number of the caller (CLIP) shown on your display.
2. The caller has arranged with the network provider to allow his/her phone number to be identified (CLI).

The screen displays **Extern. Call** if you have not arranged for calling line identification presentation, **Withheld** if calling line identification has been withheld by the caller or **Unavailable** if it has not been arranged with the network provider.

## Handsfree operation

You can make calls immediately in handsfree mode (the [ ] key lights up permanently) after entering the phone number by pressing the handsfree key [ ]. Toggle between earpiece and handsfree mode during a call and when playing back the answering machine by pressing the [ ] key. The volume can be adjusted during handsfree operation with the [ ] key.

# Operating the handsfree

## Switching the handset on/off

[ ] Press and hold the end call key.

You will hear the confirmation tone.

## Activating/deactivating the keypad lock

[#] Press and **hold** the hash key.

You will hear the confirmation tone. The icon appears in the display when the keypad lock is activated.

**Please note:**
- The handset displays an advisory message if you press a key by accident while the keypad lock is on. To deactivate the keypad lock, press the hash key [#] **and hold**.
- The keypad lock does not apply for the SOS key.

## Control key on the handset

1 Control key

The side of the control key you have to press in the given operating situation is shown in black (top, bottom) in this user guide. Example: [ ] for "press the top of the control key".

The control key has a number of different functions:

**When the handset is in idle status**

[ ] Open the directory.

[ ] Adjust the ringer melody volume of the handset (page 32).

**In lists and menus**

[ ] / [ ] Scroll up/down line by line.

**In an input field**

[ ] / [ ] Move the cursor **left** or **right**.

**During an external call**

[ ] Open the directory.

[ ] Adjust loudspeaker volume for earpiece and handsfree mode.

## Display keys

The current display functions are shown in the bottom display line. The functions of the display keys change depending on the particular operating situation.

Example:

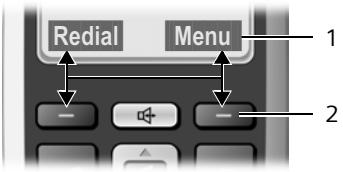


1 Current display key functions
2 Display keys

The most important display symbols are:

| | |
|---|---|
| Back | Go back one menu level or cancel operation. |
| Menu | Open the main menu or a context-dependent menu. |
| OK | Confirm highlighted selection. |
| Delete | Delete key: backspace delete one character at a time. |
| Redial | Open the last number redial list. |

## Returning to idle status

You want to return to idle status from anywhere in the menu: Press the end call key and **hold**.

If you do not press any key, the display will **automatically** revert to idle status after 2 minutes.

Changes that you have not confirmed/ stored by pressing OK will be rejected.

For an example of the display in idle status: page 1.

## Menu guidance

Your telephone's functions are accessed using a menu that has a number of levels.

### Main menu (first menu level)

▶ To open the main menu, press Menu with the handset in idle status.

#### Accessing a function

▶ Scroll to the function with the control key and press OK **or** enter the digit that appears before the function in the menu overview (page 11).

The corresponding submenu (the next menu level) is opened.

### Submenus

The functions in the submenus are displayed as lists.

To access a function:

▶ Scroll to the function with the control key and press OK **or** enter the digit combination that appears before the function in the menu overview (page 11).

Briefly pressing the end call key returns you to the previous menu level / cancels the operation.

## Correcting incorrect entries

- Navigate to the wrong input with the control key if ⇆ is displayed.
- Press Delete to delete the character to the left of the cursor.
- Insert new character to the left of the cursor.
- When entering the time and date etc., edit the flashing character.

**You will find explanations for the symbols and typographical conventions used in this user guide in the appendix, page 35.**

# Using the directory, direct dialling keys and lists

A directory, last number redial list, SMS list, calls list and answering machine list are available.

You can save up to 100 entries in the directory.

You can create a personalised directory for your own individual handset. However, you can send the list or individual entries to other handsets (page 17).

## Directory

You can store numbers and the associated names in the **directory**. With the handset in idle status, open the directory by pressing the key.

### Length of an entry

Number: max. 22 digits
Name: max. 16 characters

### Storing the first number in the directory

→ Dir empty New entry? → OK
→ (Enter number) → OK
→ (Enter name) → OK

### Storing a number in the directory

→ Menu → New Entry → OK
→ (Enter number) → OK
→ (Enter name) → OK

### Selecting a directory entry

Open the directory.

You have the following options:

- Use to scroll to the entry until the required name is selected.
- Enter the first character of the name, or scroll to the entry with .

### Dialling with the directory

→ (Select entry; page 16) →

### Managing directory entries

You have selected an entry (page 16).

#### Editing entries

Menu → Edit Entry → OK
→ (Change number if required)
→ OK
→ (Change name if required)
→ OK

#### Using other functions

The following functions can be selected with Menu → :

**Use Number**
Edit or add to a stored number. Then dial or use other functions with Menu.

**Show Number**
Show number.

**Delete Entry**
Delete selected entry.

**Send Entry**
Send a single entry to another handset (page 17).

**Delete List**
Delete **all** directory entries.

**Send List**
Send the complete list to another handset (page 17).

## Sending the directory to another handset

**Requirements:**

- The sending and receiving handsets must both be registered on the same base station.
- The other handset and base station can send and receive directory entries.

→ (Select entry; page 16) → Menu → Send Entry / Send List → OK → (Enter the internal number of the receiving handset) → OK

A successful transfer is confirmed by a message and confirmation tone on the receiving handset.

## Adding a displayed number to the directory

You can copy any numbers to the directory that appear in a list, for example the calls list or the last number redial list.

A number is displayed.

Menu → Copy to Directory → OK

▸ Complete the entry (page 16).

The message playback is interrupted during the number transfer from the answering machine list.

# Direct dialling and SOS keys

You can store particularly important phone numbers, for example emergency numbers, under the 4 **direct dialling keys**. You can programme the direct dialling key I for SOS calls.

Dial the stored direct dialling number

- **on the base station** by pressing the corresponding direct dialling key,
- **on the handset** by pressing the corresponding direct dialling key and the talk key .

To initiate an SOS call, proceed as described in the Section "SOS procedure" (page 7).

Refer to the **font table** (page 39) for information on how to enter the text correctly.

The programmed assignment of the direct dialling keys and the SOS key applies both for the handsets and for the base station.

**Please note:**
The SOS key still works even if the keypad lock is switched on.

## Storing/changing direct dialling/SOS keys

You can assign external phone numbers and the internal call function to the direct dialling keys. You should programme the direct dialling key I for SOS calls (page 18).

Menu → Settings → OK → Direct Diall. Keys → OK → I: <no entry> → Select direct dialling key (I to IV)

### Entering/changing an entry

You have selected a direct dialling key.

Menu → Edit Entry → OK

Enter or edit the number if required and press OK.

Enter or edit the name if required and press OK.

## Using other functions

The following functions can be selected with Menu → ⇕:

**Delete Entry**
Delete selected entry.

**Call. Home Internal**
Pressing this key results in all registered handsets and the base station being called.

**Use Number**
Edit or add to a stored number. Then dial or use other functions with Menu.

> **Please note:**
> When a phone number is displayed on the screen, you can programme this number onto an unassigned direct dialling key by pressing and **holding** the relevant direct dialling key.

## Programming SOS mode

**Requirement:** SOS mode is not activated.

Menu → Settings → OK → Direct Diall. Keys → OK → I: <no entry> (Direct dialling key I selected) → Menu → Emergency Call Mode → OK

If SOS mode has already been activated and is then reactivated, **Change no./ name?** appears in the display. Respond to the request

- with Yes to continue the procedure
- with No to continue with **Label with Internal Call**

Enter or edit the number if required and press OK.

Enter or edit the name if required and press OK.

**Further number?**
Confirm with Yes to enter additional SOS numbers. You can enter up to four SOS numbers.

**Label with Internal Call**
Confirm with Yes to initiate an internal call in addition to the stored numbers when the SOS key is pressed.

**Record own name/addr.**
Confirm with Yes to speak a message (e.g. name and address), which will be announced automatically to the called user after pressing the SOS key. The announcement is played back for confirmation purposes and can be changed or deleted.

SOS mode is activated.

> **Please note:**
> After the SOS procedure is programmed, functionality should be tested.

## Changing/deleting SOS numbers

**Requirement:** SOS mode is activated.

Menu → Settings → OK → Emergency Numbers → Menu → Edit Entry/Delete Entry → OK

Now change or delete the desired entries.

If your telephone is connected to a PABX, you may have to enter the access code (external line prefix) as the first digit of your entry (see the user guide for your PABX).

> **Please note:**
> The emergency call text that the recipient of your emergency call hears comprises two or three text parts. The callee first hears text part 1, then part 2 and finally part 3. If you have not added any personal emergency call text (text part 2), the emergency call only comprises text part 1 and text part 3.
> – Text part 1 (predefined by default): "*This is an emergency call.*"
> – Text part 2 (personal emergency call text): You can speak this text yourself (see page 18). For example, you can state your name and address here. Example: "*This is John Smith, 8 Park Road, Suffolk IP25 9AL*"
> – Text part 3 (predefined by default): "*To accept this call, please press key 5.*"

## Switching on/off SOS mode

Menu → Settings → OK → Emergency Call Mode → OK (☑ = on)

Having switched on SOS mode, proceed as described in the Section **Programming SOS mode** (page 18).

## Last number redial list

The last number redial list contains the ten numbers last dialled with the handset (max. 22 digits). If one of the numbers is in the directory, then the corresponding name will be displayed.

### Dialling from the last number redial list

**Redial** Press the display key.

Select an entry.

Press the talk key. The number is dialled.

### Managing entries in the last number redial list

**Redial** Press the display key.

Select an entry.

**Menu** Press the display key.

The following functions can be selected with :

**Use Number** (as in the directory, page 16)

**Copy to Directory** (as in the directory, page 16)

**Delete Entry** (as in the directory, page 16)

**Delete List** (as in the directory, page 16)

## Opening the message list with the display key

You can use the display key to open the SMS list, the answering machine list, the network mailbox (if your network provider supports this function and the network mailbox is set up for speed dialling, page 29) and the calls list.

An advisory tone sounds as soon as a **new entry** appears in a list. A message appears in the display. If you press the display key , you will see all the lists that contain new messages. If only one list contains new messages, this list will be opened automatically. Press any key and the message advising of new messages is no longer shown on the display.

The display key is faded out when the list is exited. Access to the the answering machine list can be initiated with key 1 on the handset (if the handset is set up for speed dialling) or the keys on the base station, while the SMS list and the calls list can be opened via the menu (see page 11). The display key is available again after a new entry in one of the lists.

**Please note:**
If calls are stored in the network mailbox you will receive a message if the appropriate settings have been made (see the network mailbox instructions of your network provider).

## Calls list

**Requirement:** CLIP (page 13)

The calls list contains

- missed calls

Depending on the list type selected, all numbers of the last 20 missed calls are stored.

The list is displayed as follows:

Calls List: 01+02

Number of new messages + number of old, read messages.

### Selecting the list type for the calls list

Menu ➔ 6 mno 8 tuv 9 wxyz 1 ∞ 0 +
➔ Enter digits: 1 ∞ = missed calls ➔ OK

The entries in the calls list are preserved if you change the list type.

## Opening the calls/answering machine list

✉ ➔ Calls List: / Voice Mail: 01+02 ➔ OK

Select entry.

The last call received is displayed as the first entry in the **calls list**.

The first new message received is displayed as the first entry in the **answering machine list**. The playback starts.

New messages are placed after old messages when they have been played back.

## List entry

Example of a list entry:

- Status of entry

  **In the calls list**

  New Call: new missed call.
  Old Call: entry already read.

  Only for list type "all calls":
  Call Recv.: Call was answered.
  Answer M.: The answering machine answered the call. A message was left.

  **In the answering machine list**

  New Msg.: New message on the answering machine.
  Old Msg.: Previously heard message on the answering machine.

- Number or name of caller

  You can add the number of the caller to the directory (page 17).

You can delete the current entry with Menu ➔ Delete Entry.

You can show the date and time of the call (if set, page 10) with Menu ➔ Date and Time.

## Dialling from the calls list

Open the calls list (see page 20).

Select an entry.

Press the talk key. The number is dialled.

## Deleting the calls list

**Caution!** All **old and new** entries will be deleted.

Menu ➔ Calls List: ➔ OK ➔ Menu ➔ Delete List ➔ OK

Press and **hold** (idle status).

**Please note:**
Deleting old messages from the answering machine list: page 27.

# Automatic network provider code (preselection)

You can specify a call-by-call number (preselection number) which is **automatically** placed in front of certain numbers according to two lists when you dial them.

- The list "With Preselect" contains the "Rule": Prefix numbers or the first digits of prefix numbers, for which the preselection number is to be used.
- The list "Without Preselect" contains the "Exception to the rule".

Example:

You entered 08 for "With Preselect". Now all numbers that start with 08 will be dialled with preselection.

However, if you want, for example, that 081 is still dialled without preselection, enter 081 for "Without Preselect".

## Storing preselection numbers

Menu ➜ Settings ➜ OK ➜ Base ➜ OK ➜ Preselection ➜ OK ➜ Preselect Number ➜ OK

| | |
|---|---|
| | Enter or edit preselection number (call-by-call number). |
| OK | Press the display key. The entry is stored. |
| | Press and **hold** (idle status). |

## Saving or editing entries in the preselection lists

Each of the two lists can contain 11 entries with 4 digits.

- Numbers may be prefixed according to the country in the "With Preselect" list. This means, for example, that all national calls or calls to the mobile network are **automatically** linked to the preselection number you have stored previously.

Menu ➜ Settings ➜ OK ➜ Base ➜ OK ➜ Preselection ➜ OK ➜ With Preselect / Without Preselect ➜ OK

| | |
|---|---|
| | Select entry and press OK. |
| | Enter or edit first digits of number. |
| OK | Press the display key. The entry is stored. |
| | Press and **hold** (idle status). |

## Temporarily cancelling preselection

(press and hold) ➜ Menu ➜ Preselect off ➜ OK

### Permanently deactivating preselection

- Delete the preselection number with Delete and press OK.

# SMS (text messages)

Your unit is supplied ready for you to send text messages immediately.

**Requirements:**

- Calling line identification presentation (CLIP, page 13) is enabled for your phone connection.
- Your network provider supports SMS in the fixed network (information on this can be obtained from your network provider).
- You are registered with your service provider to send and receive SMS.

Text messages are exchanged between SMS centres that are operated by service providers. You must enter the SMS centre through which you wish to send and receive in your unit. You can receive SMS from **every** SMS centre that is entered if you have registered with your service provider.

Your text message is sent through the SMS centre that is active (page 24). Only one SMS centre can be active at any one time.

If no SMS centre is entered, the SMS menu only consists of the entry **Settings**. Enter an SMS centre (page 23).

**Please remember:**

- If your phone is connected to a PABX, please read page 24.
- You must also have registered with your service provider for receiving SMS text messages.
- Each incoming SMS is signalled by a single ring (ringtone as for external calls). If you accept such a call, the SMS will be lost. To prevent this, suppress the first ringtone for all external calls (page 32).

## Writing/sending an SMS

An SMS may contain up to 160 characters.

### Writing/sending an SMS

Menu ➔ SMS ➔ OK ➔ Write Message ➔ OK

Write an SMS. For how to enter the text, see page 39.

Menu ➔ Send Text

Select and press OK.

Enter the number with prefix (including your local area code) from the directory or key it in manually, and press OK.
For SMS to an SMS mailbox: put the mailbox ID at the **end** of the number.
The SMS is sent.

**Please note:**
If you are interrupted by an external call while writing an SMS, the text is automatically saved in the draft message list.

## Draft message list

In the draft message list, you can save, edit later and send an SMS.

### Saving an SMS in the draft message list

You are writing an SMS (page 22).

Menu ➔ Save Text ➔ OK

### Opening the draft message list

Menu ➔ SMS ➔ OK ➔ Outgoing ➔ OK

The first entry in the list is displayed, e.g.:.

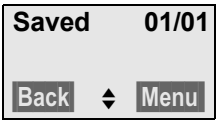


01/01: Current number/total number of SMS text messages

### Reading or deleting SMS messages

▶ Open the draft message list.

[▲▼] Select SMS.

Menu Press the display key.

You have the following options:

**Read SMS**
Select and press OK to read the SMS message. Scroll in the SMS using [▲▼].

**Delete Entry**
Select and press OK to delete the SMS message.

**Date/Time**
Select and press OK to show when the SMS message was written.

**Delete List**
Select and press OK to delete all SMS messages in the draft message list.

### Writing/editing an SMS

You are reading an SMS in the draft message list.

Menu Press the display key.

You have the following options:

**Write Message**
Write and then send a new SMS (page 22) or save.

**Use Text**
Edit the text of the saved SMS and then send (page 22).

## Receiving an SMS

All received text messages are saved in the incoming message list. Since an SMS remains in the list even after it has been read, you should **regularly delete SMS messages from the list**.

The display tells you if the SMS memory is full.

▶ Deleting text messages you no longer require (page 24).

### Incoming list

The incoming message list contains:

- All received SMS messages, starting with the latest.
- SMS messages that could not be sent on account of an error.

New text messages are signalled on all Gigaset E36 handsets by a message in the display and an advisory tone.

### Opening the incoming message list with the display key

Press [✉]

The incoming message list is displayed as follows (example):

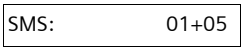


01+05: The number of new + the number of old, read messages

An entry in the list is displayed as follows for example:

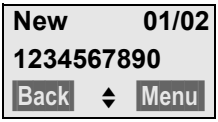


01/02: Current Number of the SMS currently in the display / total number of new SMS messages

### Opening the incoming message list via the SMS menu

Menu ➔ SMS ➔ OK ➔ Incoming 01+05 ➔ OK

### Reading or deleting SMS messages

▶ Open the incoming message list.

Select SMS.

Menu Press the display key.

You have the following options:

**Read SMS**
Select and press OK to read the SMS message. Scroll through the SMS messages using . A new SMS message which you have read acquires the status Old.

**Delete Entry**
Select and press OK to delete the SMS message.

**Copy to Directory**
Select and press OK to copy the sender's number to the directory.

**Date and Time**
Select and press OK to show when the SMS message was received.

**Delete List**
Select and press OK to delete all SMS messages in the incoming message list.

## Replying to or forwarding text messages

You are reading an SMS (page 24).

Menu Press the display key.

You have the following options:

**Reply**
Write and send a reply SMS directly (page 22).

**Use Text**
Edit the text in the SMS and then send it (page 22).

**Send Text**
Forward the text of an SMS to another recipient (page 22).

# Setting up the SMS centre

## Entering/changing SMS centres

▶ Before changing or entering a new service number, make sure to find out about service offers and special features of your service provider.

Menu ➔ SMS ➔ OK ➔ Settings ➔ OK ➔ Service Centres ➔ OK

Select the SMS centre (e.g. Service Centre 1) and press OK.

You have the following options:

**Activ. send Centre**
If the SMS messages are to be sent through this SMS centre, press OK to activate the SMS centre (☑ = on). If a different SMS centre was active previously, then this will be deactivated.

**Centre No.**
Enter the number of the SMS centre and press OK.

## Sending an SMS through another SMS centre

▶ Activate the SMS centre (2 or 3) as the active send centre (page 24).

▶ Send the SMS.

# SMS to a PABX

◆ You can only receive an SMS when **calling line identification presentation** (page 13) is forwarded to the extension of the **PABX (CLIP)**. The CLIP of the phone number for the SMS centre is evaluated in your **Gigaset**.

◆ Depending on your PABX, you may have to add the access code (external line prefix) before the number of the SMS centre.

If in doubt, test your PABX, for example by sending an SMS to your own phone number: once with the access code and once without.

- When you send SMS messages, your sender number may be sent without your extension number. In this case the recipient cannot reply to you directly.

Sending and receiving SMS **on ISDN PABXs** is only possible via the MSN number assigned to your base station.

## Activating/deactivating the SMS function

When you switch off you cannot send or receive any further SMS text messages with your phone.

Settings you have made for sending and receiving text messages (the numbers of SMS centres) and any entries in the incoming message and draft message lists will be retained even after the function is deactivated.

Menu ➜ 6mno 8tuv 9wxyz 2abc 6mno ➜ Enter digits: 0+ = Deactivate the SMS function; 1oo = Activate the SMS function (default status) ➜ OK

## SMS troubleshooting

### Error codes when sending

If an SMS cannot be sent for a longer period of time, it is moved to the incoming message list and given the status Err. XX.

| | |
|---|---|
| E0 | Calling line identification permanently withheld (CLIR) or calling line identification presentation not activated. |
| FE | Error occurred during SMS transfer. |
| FD | Connection to SMS centre failed, see self-help. |

### Self-help with errors

The following table lists error situations and possible causes and provides notes on troubleshooting.

| |
|---|
| You cannot send messages.<br>1. You have not requested the CLIP service (calling line identification presentation, page 13).<br>▸ Ask your service provider to enable this service.<br>2. Text message transmission has been interrupted (e.g. by a call).<br>▸ Re-send the text message.<br>3. Network provider does not support this feature.<br>4. No number or an invalid number is entered for the SMS centre activated as the send centre.<br>▸ Enter phone number (page 24). |
| The SMS message is played back.<br>1. The "display call number" service is not activated.<br>▸ Ask your service provider to enable this service (chargeable).<br>2. Mobile phone/fixed network operator and network SMS service provider have not agreed on a cooperation.<br>▸ Obtain information from your network SMS service provider.<br>3. You are not registered with your service provider to receive text messages. Please contact your service provider to sign up for this service. |
| You cannot access the SMS functions on your handset.<br>Another handset that is registered at the same base station is currently using the SMS functions.<br>▸ Wait until there is no other handset using the SMS functions. |

# Operating the base station answering machine

You can operate the answering machine via the handset or using the keys on your base station (page 2).

## Operation via the handset

The handset loudspeaker activates **automatically** if you receive an acoustic prompt or message while operating. You can switch it off with the handsfree key [📞].

### Switching answering machine on/off

Menu ➜ Voice Mail ➜ OK ➜ Answer Machine ➜ OK (☑ = on)

After switching on, the remaining memory time is announced. The ∞ icon appears in the display. The [✉] key lights up on the base station.

The telephone is supplied with a pre-recorded announcement. This pre-recorded announcement is used if no personal announcement is available.

If the memory is full the answering machine switches itself off automatically. It activates again automatically when you delete old messages.

### Recording your own announcement

Menu ➜ Voice Mail ➜ OK ➜ Announcements ➜ OK ➜ Record Announce. ➜ OK ➜ Start recording? ➜ OK

You hear the ready tone (short tone).

▸ Now speak your announcement (at least 3 sec.).

Cancel recording with [☎] or Back. Restart the recording with OK.

OK Press the display key to end the recording.

After recording, the announcement is played back for you to check.

**Please remember:**

- Recording ends automatically when the max. recording time of 170 seconds is reached or if there is a break in speaking of more than 2 seconds.
- If you cancel the recording, the pre-recorded announcement is then used.
- The recording is cancelled if the answering machine memory is full.
  ▸ Delete old messages and repeat recording if required.

### Playing back announcements

Menu ➜ Voice Mail ➜ OK ➜ Announcements ➜ OK ➜ Play Announce. ➜ OK ➜ [☎] press and **hold** (idle status)

You will hear the pre-recorded announcement if you have not recorded one of your own.

### Deleting announcements

Menu ➜ Voice Mail ➜ OK ➜ Announcements ➜ OK ➜ Delete Announce. ➜ OK

The pre-recorded announcement is used again after a personal announcement is deleted.

## Playing back messages

The date and time of each message is logged (provided this has been set, page 10). If calling line identification presentation is activated, the caller's number is displayed. If the caller's number is stored in the directory, the respective name is displayed.

### Playing back new messages

New messages that have not yet been heard are indicated by a message on the display. The [⌂] key flashes on the base station.

Press the display key [✉].

**Voice Mail: 01+02**
Select as required and press **OK**.

Playback begins with the first new message.

### Playing back old messages

See answering machine list, page 20.

### Stopping and controlling playback

During message playback:

[2abc] Pause playback. Press [2abc] again to resume.

[▲] Go to the start of the current message.

2 x [▲] To previous message.

[▼] To next message.

2 x [▼] To next-but-one message.

After an interruption of over one minute, the answering machine returns to idle status.

### Marking a message as new

You can mark a message you have already heard as new again.

During message playback:

**Menu** ➜ **Mark as new** ➜ **OK**

### Adding the telephone number of a message to the directory

See "Adding a displayed number to the directory", page 17.

## Deleting messages

You can delete old messages either all together or individually.

### Deleting all old messages

During playback or pause:

**Menu** ➜ **Delete all** ➜ **OK**

### Deleting individual old messages

During playback:

**Delete** Press the display key.

## Picking up a call from the answering machine

You can take a call while the answering machine is recording it.

[✆] / [🔊] Press the talk or handsfree key.

Recording stops and you can speak to the caller.

If 3 seconds of the call have already been recorded when you pick it up, the call will be displayed as a new message.

You can answer the call even if it is not signalled on the handset.

# Activating/deactivating call screening

While a message is recording, you can listen to it on the loudspeakers in the base and in the registered Gigaset E36 handsets.

## Permanently activating/deactivating call screening

Menu ➜ Voice Mail ➜ OK ➜ Call Screening ➜ OK ➜ Handset / Base ➜ OK (☑ = on)

Call screening can be activated simultaneously on the Base and on the Handset.

## Switching off call screening for the current recording

Press the end call key.

# Setting up the answering machine

The answering machine has already been preset at the factory. Make individual settings using the handset.

## Setting up call answering

You can define when you want the answering machine to answer a call.

Menu ➜ Voice Mail ➜ OK ➜ Ring Delay ➜ OK

Immediately / 10 sec / 20 sec / 30 sec / Auto . Select and press OK (☑ = on).

The following applies for call answering with Auto:

- If no new messages are present as yet, the answering machine answers a call after **20 seconds**.
- If new messages are present, the answering machine answers a call after just **10 seconds**.

**Please remember:**

You can set your telephone so that the **first** ringtone is **suppressed** for all calls (page 32). This means that the time selected for call answering predetermines how long the caller must wait before the answering machine answers the call.

## Setting the recording time

You can set the maximum recording time of a message.

You can choose: 30 sec, 60 sec, 120 sec or Maximum.

Menu ➜ Voice Mail ➜ OK ➜ Message Length ➜ OK
➜ Choose the recording time
➜ OK (☑ = on)

# Resetting speed dialling on the answering machine

The integrated answering machine is factory-set for speed dialling. However, if you have set the network mailbox for speed dialling (page 29), you can reset this setting.

Menu ➜ Voice Mail ➜ OK ➜ Set Key 1 ➜ OK ➜ Answer Machine ➜ OK

When you have selected the answering machine, press and **hold** key **1**. You will be connected directly.

The setting for speed dialling applies to all registered handsets.

# Using the network mailbox

The network mailbox is your network provider's answering machine. You cannot use the network mailbox unless you have **applied** to your network provider.

## Using the network mailbox for setting speed dialling

With speed dialling, you can direct dial either the network mailbox or the integrated answering machine directly.

The integrated answering machine is preconfigured for speed dialling. You can configure the network mailbox instead. Obtain information from your network provider.

### Configuring the network mailbox for speed dialling and entering the network mailbox number

Menu ➜ Voice Mail ➜ OK ➜ Set Key 1 ➜ OK ➜ Network Mailbox ➜ OK (☑ = on) ➜ Enter the number of the network mailbox ➜ OK

This setting is now valid for all registered handsets.

### Calling the network mailbox

1 ∞ Press and **hold**. This connects you directly to the network mailbox.

# Using several handsets

## Registering handsets

You can register up to four handsets on your base station.

Automatic registration Gigaset E36 on Gigaset E365, see page 9.

### Manual registration Gigaset E36 on Gigaset E365

You must activate manual registration of the handset on both the handset and the base station.

After it has registered, the handset returns to idle status. If several handsets are registered on the base, the internal number is shown in the display after registration, e.g. **2**.

The registration process is cancelled after 60 seconds. If the handset has not registered within this time, repeat the process.

#### On the handset

Menu ➜ Settings ➜ OK ➜ Handset ➜ OK ➜ Register Handset ➜ OK ➜ Enter system PIN of base station (default status: 0000) ➜ OK

#### On the base station

📞 Press and hold the registration/paging key on the base station (page 2) (min. 1 sec.).

### Registering other handsets

You can register other Gigaset handsets and handsets for other devices with GAP functionality as follows.

**On the handset:** Start to register the handset as described in its user guide.

**On the base station:** Press and **hold** the registration/paging key 📞 on the base station (page 2) (min. 1 sec.).

# Locating a handset ("Paging")

You can locate your handset using the base station.

- Press the registration/paging key on the base station (page 2) **briefly**.
- All handsets will ring at the same time ("paging"), even if the ring tones are switched off.

### Ending paging

**Briefly** press the registration/paging key on the base station (page 2) or press the talk key on the handset.

# Making internal calls

Internal calls are free calls between handsets that you have registered on the same base station or calls between a handset and the base station. In order to be able to initiate an internal call, one of the speed dialling keys must be programmed for internal calls (see page 17).

### Calling other handsets

Press the relevant speed dialling key (I ... IV) which is programmed for internal calls when the handset or base station is in idle mode. If the internal call is initiated on the base station, all handsets are called immediately. If the internal call is initiated on the handset, the query **Call home internal?** must be acknowledged with **Yes**. You will see the message **Calling all handsets** on the display.

**Please note:**
If no user connects, the handset or the base station switches to idle mode after 3 minutes.

### Answering an internal call

Your phone rings and the internal number of the caller is displayed on the screen, for example **2**. If the call is coming from the base station, **0** is displayed.

Press the talk or handsfree key / on the handset **or** the handsfree key on the base station to answer the call.

### Ending a call

Press the end call key on the handset **or** the handsfree key on the base station.

## Transferring a call to another handset/ internal consultation

You are calling an **external** number.

- Initiate an internal call, see "Calling other handsets" auf Seite 30. (You can press the display key **Back** during the internal call and are connected again to the external caller.)

When an internal call gets answered:

- **To transfer** to the internal number, press the end call key on the handset **or** the handsfree key on the base station.
- The internal caller must end the call **to terminate the consultation**. You are reconnected with the external caller.

**Please note:**
You can also press the end call key **before** connecting the internal caller. If the internal party does not answer, or their phone is in use, the call will automatically return to you.

## Accepting a waiting call

If you get an **external** call while conducting an **internal** call, you will hear the call waiting tone (short tone). The caller's number will appear in the display if calling line identification is enabled.

- Press the end call key on the handset **or** the handsfree key on the base station to end the internal call.
- Press the talk key on the handset **or** the handsfree key on the base station to answer the external call.

## Listening in to an external call

You want to listen in to an existing external call.

**Requirement:** The Listening in function must be activated.

**Activating/deactivating the function:**

Menu ➜ Settings ➜ OK ➜ Base ➜ OK ➜ Listening in ➜ OK (☑ = on)

**Listen in to call:**

Press the talk key on the handset **or** the handsfree key on the base station. All participants hear a signal tone. Conf. Call is shown on the handset display.

**Ending listening in:**

Press the end call key on the handset **or** the handsfree key on the base station so that all participants hear a signal tone.

If the **first** internal participant presses the end call key, the handset that has 'listened in' remains connected to the external caller.

# Handset settings

Your handset comes with default settings. You can change the individual settings.

## Changing the display language

You can view the display texts in different languages.

Menu ➜ Settings ➜ OK ➜ Language ➜ OK ➜ (Choose language) ➜ OK

The current language is indicated by ☑.

If you accidentally choose a language you do not understand:

Menu ➜ 6mno 3def ➜ (Choose language) ➜ OK

## Screensaver

When this function is activated, the time is shown in digital in idle mode, filling the entire display.

Menu ➜ Settings ➜ OK ➜ Handset ➜ OK ➜ Screen Saver ➜ OK (☑ = on)

## Auto answer

When this function is activated, when a call arrives you can simply lift the handset out of the base without having to press the talk key .

Menu ➜ Settings ➜ OK ➜ Handset ➜ OK ➜ Auto Answer ➜ OK (☑ = on)

## Adjusting the loudspeaker volume

You can set the loudspeaker volume for handsfree talking and the earpiece volume to five different levels (1–5; e.g. volume 2 = ).

Menu ➜ Audio Settings ➜ OK ➜ Handset Volume / Handsfree Volume ➜ OK

Adjust the volume and press OK.

Adjust the volume during a call:

Press the control key.

Adjust the volume and press OK.

## Changing ringtones

- Volume:
  Five volume levels (1-5; e.g. volume 2 = ) and "off" (volume 0 = ).
- Melody:
  List of pre-loaded ringer melodies. The first three melodies are the "classical" ring tones.

You can also set different melodies for the following functions:

- External Calls: For external calls
- Internal Calls: For internal calls
- Alarm Clock: For the alarm clock

For how to set the ringtones for the base station, see page 34.

### Setting ringer volume

The ringer volume is the same for all types of signalling.

Menu ➜ Audio Settings ➜ OK ➜ Ringer Volume ➜ OK ➜ (Adjust volume) ➜ OK

Or in idle status:

Press briefly ➜ (Adjust volume) ➜ OK

### Setting ringer melody

Set different ringer melodies for external calls, internal calls and the alarm clock.

Menu ➜ Audio Settings ➜ OK ➜ Ringer Melody ➜ OK ➜ External Calls / Internal Calls / Alarm Clock ➜ OK ➜ (Select melody) ➜ OK (☑ = on)

## Activating/deactivation suppression of the first ringtone

The phone identifies an incoming SMS from the first network signal.

Menu ➜ 6mno 8tuv 9wxyz 2abc 5jkl ➜ Enter digits: 0+ = make first ringtone audible; 1∞ = suppress first ringtone ➜ OK

**Please remember:**

If first ringtone muting is deactivated, then every incoming SMS will be signalled by a ringtone. If you take this type of "call" at the first ringtone, you will lose the SMS.

## Advisory tones

Your handset uses 'advisory tones' to tell you about different activities and statuses. The following tones can be activated and deactivated independently of each other:

- **Advisory tones**:
  - **Key click**: Each key press is acknowledged.
  - **Confirmation tone** (rising tone sequence): at the end of an entry/ setting, when the handset is placed in the base station and on arrival of an SMS or a new entry in the answering machine list or the calls list.
  - **Error tone** (descending tone sequence): when you make an incorrect entry.
  - **Menu end tone**: when scrolling at the end of a menu.

- **Battery warning tone**: The battery requires charging.

**You cannot deactivate the confirmation tone for placing the handset in the base station.**

### Activating/deactivating advisory tones

Menu ➜ Audio Settings ➜ OK ➜ Advisory Tones ➜ OK (☑ = on)

### Setting the battery warning tone

Menu ➜ Audio Settings ➜ OK ➜ Battery Low ➜ OK ➜ On / Off / During Call ➜ OK (☑ = on)

The battery warning tone is activated or deactivated or sounds during a call.

## Using the handset as an alarm clock

### Activating/deactivating the alarm clock

**Requirement:**
The time is set (see page 10).

Menu ➜ Alarm Clock ➜ OK ➜ Activation ➜ OK (☑ = on)

After you activate the alarm clock, the menu for setting the wake up time opens automatically.

If the alarm clock is set, the wake up time appears with the ⏲ icon in the display.

### Setting the wake up time

Menu ➜ Alarm Clock ➜ OK ➜ Wakeup time ➜ OK ➜ Enter wake up timen ➜ OK

### When the alarm clock rings…

Press the display key Off or any key to deactivate the alarm clock for 24 hours.

If you do not press any key, the alarm clock switches off after one minute.

## Restoring the handset default settings

You can reset any individual settings and changes that you have made. This will not affect entries in the directory, calls list, or SMS lists or the handset's registration on the base station.

Menu ➜ Settings ➜ OK ➜ Handset ➜ OK ➜ Reset Handset ➜ OK

Cancel the reset with ☎.

# Base station settings

The base station settings are carried out using a registered Gigaset E36 handset.

## Changing the system PIN

You have to enter the system PIN when registering a handset on the base station.

You can change the base's 4-digit default system PIN ("0000") to a 4-digit PIN known only to yourself.

Menu ➜ Settings ➜ OK ➜ Base ➜ OK ➜ System PIN ➜ OK ➜ PIN: ➜ OK ➜ New PIN: ➜ OK

Should you forget the system PIN, you can reset the base station to the original code 0000:

Remove the mains cable from the base station. Press and hold down the registration/paging key 📢 on the base station while you reconnect the mains cable to the base station. Only release the key when you hear a signal tone.

The base station is now reset and the system PIN is set to 0000.

## Changing ringtones

- Volume:
  You can choose between five volumes and the "Crescendo" ring, see page 32. Select "0" to deactivate the ringtone on the base station.
- Melody:
  You can set a ringtone melody for external calls, see page 32.

Menu ➜ Settings ➜ OK ➜ Base ➜ OK ➜ Audio Settings ➜ OK ➜ Ringer Volume / Ringer Melody ➜ OK

For how to adjust the settings, see page 32.

## Restoring the base station to factory settings

When the settings are restored all handsets are de-registered. Each individual setting is restored. Only the date and time are retained.

Menu ➜ Settings ➜ OK ➜ Base ➜ OK ➜ Base Reset ➜ OK

# Operating the base station on the PABX

The following settings are only needed when your PABX requires them. Please refer to the user guide for your PABX.

You cannot send or receive SMS messages on PABXs that do not support Calling Line Identification.

### Changing the dialling mode

Menu ➜ 6mno 8tuv 9wxyz 1 1 ➜ Enter digits for dialling mode: 0+ = Dual-tone multifrequency dialling (DTMF); 1 = Pulse dialling (PD) ➜ OK

### Switching temporarily to dual-tone multifrequency dialling (DTMF)

If your PABX is still using pulse dialling (PD) but tone dialling is required for a connection (e.g. to play back the network mailbox), you have to switch temporarily to tone dialling.

**Requirement:** You are currently conducting a call or have already dialled an external number.

Press the asterisk key *R. Tone dialling is activated **for this connection only**.

### Setting the flash time

Menu ➜ 6mno 8tuv 9wxyz 1 2abc ➜ Enter digits for flash time: 0+ = 80 ms; 1 = 100 ms; 2abc = 120 ms; 3def = 180 ms; 4ghi = 250 ms; 5jkl = 300 ms; 6mno = 600 ms; 7pqrs = 800 ms ➜ OK

### Changing pause after line seizure

You can set the length of the pause inserted between pressing the talk key and sending the phone number.

Menu ➜ 6mno 8tuv 9wxyz 1 9wxyz ➜ Enter digits for the current pause length: 1 = 1 sec.; 2abc = 3 sec.; 3def = 7 sec. ➜ OK.

### Changing the pause after the recall key

Menu ➜ 6mno 8tuv 9wxyz 1 4ghi ➜ Enter the digits for the current pause length: 1 = 800 ms; 2abc = 1600 ms; 3def = 3200 ms ➜ OK

# Appendix

## Symbols and typographical conventions used

This section explains the meaning of certain symbols and typographical conventions that are used in this user guide.

| | |
|---|---|
| 123 | Enter digits or letters. |
| Menu | The display functions currently in the bottom display line are shown in reverse video. Press the relevant display key to launch the function. |
| | Press the top or bottom of the control key, e.g. when scrolling. |
| / 0+ / *R etc. | Press the illustrated key on the handset. |
| External Calls / Internal Calls (example) | Select one of the menu functions (External Calls or Internal Calls) from the list and press OK. |
| Menu ➜ Audio Settings ➜ OK ➜ Ringer Melody (example) ➜ OK | Press Menu. Select Audio Settings using and press OK. Select Ringer Melody using and press OK. |

## Care

- Wipe the base station, charging cradle and handset with a **damp** cloth (do not use solvent) or an antistatic cloth.

**Never** use a dry cloth. This can cause static.

## Contact with liquid ⚠

If the handset has come into contact with liquid:

1. **Switch off the handset and remove the battery pack immediately**.
2. Allow the liquid to drain from the handset.
3. Pat all parts dry, then place the handset with the battery compartment open and the keypad facing down in a dry, warm place **for at least 72 hours** (**not** in a microwave, oven etc.).
4. **Do not switch on the handset again until it is completely dry.**

When it has fully dried out, you will normally be able to use it again.

## Questions and answers

If you have any questions about using your phone, visit us anytime at www.siemens.com/gigasetcustomercare. The table below contains a list of common problems and possible solutions.

| |
|---|
| **The display is blank.**<br>1. The handset is not switched on.<br>▸ Press and **hold** the end call key .<br>2. The battery is flat.<br>▸ Charge the battery or replace it (page 9). |
| **The handset does not respond to a key press.**<br>The keypad lock is activated.<br>▸ Press and **hold** the hash key (page 14). |

| |
|---|
| **Base** is **flashing in the display.**<br>1. The handset is outside the range of the base station.<br>▸ Move the handset closer to the base.<br>2. The base station is not switched on.<br>▸ Check the base station mains adapter (page 8). |
| **Handset does not ring.**<br>The ringtone is switched off.<br>▸ Activate the ringtone (page 32). |
| **You cannot hear a ringtone/dialling tone.**<br>Base station's phone cord has been replaced.<br>▸ When purchasing a new cord, ensure that it has the correct pin connections (page 8). |
| **The incoming call number is not displayed although CLIP** (page 13) **is set**.<br>Phone number identification is not enabled.<br>▸ The **caller** should ask his/her network provider to enable calling line identification (CLI). |
| **You hear an error tone when keying an input**<br>(a descending sequence of tones).<br>Action has failed/invalid input.<br>▸ Repeat the operation.<br>Watch the display and refer to the operating instructions if necessary. |
| **The calls list does not indicate a time for a message.**<br>Date/time are not set.<br>▸ Set the date/time (page 10). |
| **The answering machine will not record any messages.**<br>Its memory is full.<br>▸ Delete old messages.<br>▸ Play back new messages and delete. |
| **Programming of SOS mode did not work.**<br>The feature is only available behind extension systems that do not require an "R" or a "P" for obtaining an outside line. |

## Service (Customer Care)

We offer you support that is fast and tailored to your specific needs!

Our Online Support on the Internet can be reached any time from anywhere.
http://www.siemens.com/gigasetcustomercare
It provides you with 24/7 support for all our products. It also provides a list of FAQs and answers plus user guides and current software updates (if available for the product) for you to download.

You will also find frequently asked questions and answers in the appendix of this user guide.

For personal advice on our range of products and assistance with repairs or guarantee/warranty claims you can contact us on:

UK helpdesk: 0845 367 08 12.

Please have your proof of purchase ready when calling with regard to guarantee/ warranty claims.

Replacement or repair services are not offered in countries where our product is not sold by authorised dealers.

# Authorisation

This device is intended for analogue phone lines in the UK.

Country-specific requirements have been taken into consideration.

We, Siemens Home and Office Communication Devices GmbH & Co. KG, declare that this device meets the essential requirements and other relevant regulations laid down in Directive 1999/5/EC.

A copy of the 1999/5/EC Declaration of Conformity is available at this Internet address: http://www.siemens.com/gigasetdocs.

CE 0682

# Technical data

## Recommended batteries

(Valid at the time of going to press)

Nickel-metal-hydride (NiMH):

- Sanyo Twicell 650
- Sanyo Twicell 700
- Sanyo NiMH 800
- Panasonic 700 mAh "for DECT"
- GP 700 mAh
- GP 850 mAh
- Yuasa Technology AAA Phone 700
- Yuasa Technology AAA 800
- VARTA Phone Power AAA 700 mAh

The handset is supplied with two recommended batteries.

## Handset operating times/charging times

The following information relates to batteries with a capacity of 650 mAh.

| | |
|---|---|
| Standby time | approx 165 hours (7 days) |
| Calling time | approx. 18 hours |
| Charging time | approx. 6 hours |

The operating and charging times apply only when using the recommended batteries.

## Base station power consumption

In standby mode: approx. 2 W

During a call: approx. 3 W

## General specifications

| | |
|---|---|
| DECT standard | is supported |
| GAP standard | is supported |
| Range | up to 300 m outdoors, up to 50 m indoors |
| Base station power supply | 230 V ~/50 Hz |
| Environmental conditions for operation | +5 °C to +45 °C; 20 % to 75 % relative humidity |

# Guarantee Certificate United Kingdom

Without prejudice to any claim the user (customer) may have in relation to the dealer or retailer, the customer shall be granted a manufacturer's Guarantee under the conditions set out below:

- In the case of new devices and their components exhibiting defects resulting from manufacturing and/or material faults within 24 months of purchase, Siemens shall, at its own option and free of charge, either replace the device with another device reflecting the current state of the art, or repair the said device. In respect of parts subject to wear and tear (including but not limited to, batteries, keypads, casing), this warranty shall be valid for six months from the date of purchase.
- This Guarantee shall be invalid if the device defect is attributable to improper treatment and/or failure to comply with information contained in the user guides.
- This Guarantee shall not apply to or extend to services performed by the authorised dealer or the customer themselves (e. g. installation, configuration, software downloads). User guides and any software supplied on a separate data medium shall be excluded from the Guarantee.
- The purchase receipt, together with the date of purchase, shall be required as evidence for invoking the Guarantee. Claims under the Guarantee must be submitted within two months of the Guarantee default becoming evident.
- Ownership of devices or components replaced by and returned to Siemens shall vest in Siemens.
- This Guarantee shall apply to new devices purchased in the European Union. For Products sold in the United Kingdom the Guarantee is issued by: Siemens Home and Office Communication Devices GmbH & Co. KG, Schlavenhorst 66, D-46395 Bocholt, Germany.
- Any other claims resulting out of or in connection with the device shall be excluded from this Guarantee. Nothing in this Guarantee shall attempt to limit or exclude a Customers Statutory Rights, nor the manufacturer's liability for death or personal injury resulting from its negligence.
- The duration of the Guarantee shall not be extended by services rendered under the terms of the Guarantee.
- Insofar as no Guarantee default exists, Siemens reserves the right to charge the customer for replacement or repair.
- The above provisions does not imply a change in the burden of proof to the detriment of the customer.

To invoke this Guarantee, please contact the Siemens telephone service. The relevant number is to be found in the accompanying user guide.

# Writing and editing a text message

The following rules apply when writing a text message:

- The cursor is controlled with [▲] [▼].
- Characters are added to the left of the cursor.
- Press the hash key [#] **briefly** to switch from "Abc" mode to "123", from "123" to "abc" and from "abc" to "Abc" (uppercase: 1.st letter uppercase, all others lowercase). Press the hash key [#] **before** entering the letter.
- Press the hash key [#] **three times**: Shows the selection line of the characters assigned to the hash key.
- The first letter of the name of directory entries is automatically capitalised, followed by lowercase letters.

## Editing text

When you press a key and **hold** it, the characters of that key appear in the bottom display line and are highlighted one after the other. When you release the key, the highlighted character is inserted into the input field. For how to enter special characters, see page 39.

The display briefly shows whether uppercase or lowercase letters or digits are selected when you switch from one mode to the next: The bottom text line displays "abc -> Abc", "Abc -> 123" or "123 -> abc".

## Order of directory entries

The directory entries are usually sorted in alphabetical order. Spaces and digits take first priority. The sort order is as follows:

1. Space (shown here as ␣)
2. Digits (0–9)
3. Letters (alphabetical)
4. Other characters

To get round the alphabetical order of the entries, insert a space or a digit in front of the name. These entries will then move to the beginning of the directory. Names that you have preceded with an asterisk will move to the end of the directory.

## Entering special characters

### Standard characters

| | [1 ∞] *) | [1 ∞] **) | [0 +] | [* R] | [#] |
|---|---|---|---|---|---|
| 1x | Space | Space | . | * | Abc--> 123 |
| 2x | 1 | ↵ | , | / | 123 --> abc |
| 3x | £ | 1 | ? | ( | # |
| 4x | $ | € | ! | ) | @ |
| 5x | ¥ | £ | 0 | < | \ |
| 6x | ¤ | $ | + | = | & |
| 7x | | ¥ | - | > | § |
| 8x | | ¤ | : | % | |
| 9x | | | ¿ | | |
| 10x | | | ¡ | | |
| 11x | | | ” | | |
| 12x | | | ‘ | | |
| 13x | | | ; | | |
| 14x | | | _ | | |

*) Directory and other lists
**) When writing an SMS

# Accessories

### Gigaset E36 handset

Upgrade your Gigaset to a cordless telephone system.

Gigaset E36 handset

- Large keys, illuminated keypad
- Text and symbols are shown clearly in large type on the display
- Jumbo digits (uppercase)
- Direct dialling keys
- Compatibility with hearing aids (HAC)
- Handsfree operation
- Phonebook for around 100 entries
- SMS (prerequisite: CLIP available)
- Headset connection

www.siemens.com/gigasete36

### Connection socket for headset

You will find suitable headsets on the Internet at www.plantronics.com.

# Wall mounting for base station

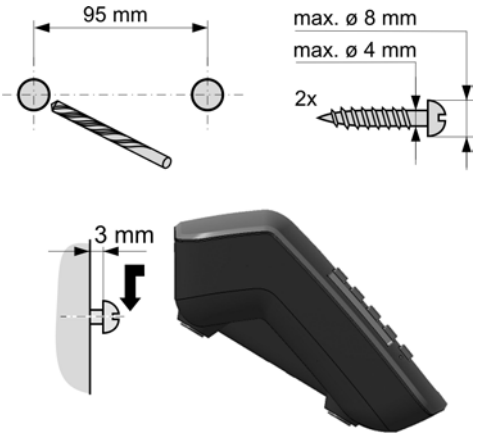

# Index


## A

Accessories . . . . . 40
Activating
  advisory tones . . . . . 32
  answering machine . . . . . 26
  auto answer . . . . . 31
  keypad lock . . . . . 14
  SMS function . . . . . 25
  suppressing ringtone . . . . . 32
Activating/deactivating SMS function . 25
Advisory tones . . . . . 32
Alarm clock . . . . . 33
Answering machine . . . . . 26
Answering machine, see also Network mailbox
Authorisation . . . . . 37
Auto answer . . . . . 13, 28, 31
Automatic network provider code . . . . 21

## B

Base station
  changing system PIN . . . . . 33
  installing and connecting . . . . . 8
  operating on PABX . . . . . 34
  power consumption . . . . . 37
  restoring default settings . . . . . 34
  setting . . . . . 33
  wall mounting . . . . . 40
Battery
  charging . . . . . 10
  display . . . . . 1, 10
  fitting . . . . . 9
  icon . . . . . 10
  recommended batteries . . . . . 37
  warning tone . . . . . 33

## C

Call
  answering . . . . . 13
  caller listening in . . . . . 31
  internal . . . . . 30
  picking up from answering machine . . . . . 27
  transferring (connecting) . . . . . 30
Call screening during recording . . . . . 28
Call waiting, internal call . . . . . 30
Calling back caller . . . . . 20
Calling back from calls list . . . . . 20
Calling line identification . . . . . 13
Calls list . . . . . 19, 20
Cancelling (operation) . . . . . 15
Care of the telephone . . . . . 35
Changing PIN . . . . . 33
Changing system PIN . . . . . 33
Characters
  deleting . . . . . 15
Charge status (battery) . . . . . 1, 10
Charge status display . . . . . 10
CLI . . . . . 13
CLI, CLIP . . . . . 13
CLIP . . . . . 13
Confirmation tone . . . . . 32
Connection socket for headset . . . . 1, 40
Control key . . . . . 1, 14
Correcting incorrect input . . . . . 15
Customer Care . . . . . 36

## D

Deactivating
  advisory tones . . . . . 32
  answering machine . . . . . 26
  auto answer . . . . . 31
  keypad lock . . . . . 14
  SMS function . . . . . 25
  suppressing ringtone . . . . . 32
Dialling
  directory . . . . . 16
Dialling mode . . . . . 34
Direct dialling keys . . . . . 6
Directory . . . . . 16
  opening . . . . . 14
  order of entries . . . . . 39
  selecting entry . . . . . 16
  sending entry/list to handset . . . . . 17
  storing entry . . . . . 16
  storing the first number . . . . . 16
Display
  changing display language . . . . . 31
  in idle status . . . . . 1
  number (CLI/CLIP) . . . . . 13
  setting . . . . . 31
Display keys . . . . . 1, 15
Displaying
  phone number (CLIP) . . . . . 13

## E

Earpiece volume . . . . . 32
Electricity consumption, see
Power consumption
Emergency call . . . . . 6
End call key . . . . . 1, 13
Entering flash . . . . . 1
Error tone . . . . . 32

## G

Guarantee Certificate . . . . . 38

## H

Handset
activating/deactivating . . . . . 14
advisory tones . . . . . 32
contact with liquid . . . . . 35
display language . . . . . 31
idle status . . . . . 15
loudspeaker volume . . . . . 32
operating and charging times . . . . . 37
registering . . . . . 29
restoring default settings . . . . . 33
searching for . . . . . 30
setting (individual) . . . . . 31
setting up for use . . . . . 9
transferring a call . . . . . 30
Handsfree operation . . . . . 14
key . . . . . 1
Hash key . . . . . 1, 14
Headset . . . . . 1, 40
Hearing aids . . . . . 5

## I

Idle status (display) . . . . . 1, 15
Incorrect input (correction) . . . . . 15
Installing, base station . . . . . 8
Internal
listening in . . . . . 31
making calls . . . . . 30
Internal call . . . . . 30
call waiting . . . . . 30

## K

Key click . . . . . 32
Keypad lock . . . . . 14
Keys
control key . . . . . 1, 14
direct dialling keys . . . . . 6
display keys . . . . . 1, 15
end call key . . . . . 1, 15
handsfree key . . . . . 1
hash key . . . . . 1, 14
key 1 (speed dialling) . . . . . 28
keypad lock . . . . . 14
message key . . . . . 19
on/off key . . . . . 1
paging key . . . . . 2
recall key . . . . . 1
SOS key . . . . . 6
speed dialling . . . . . 28
talk key . . . . . 1

## L

Last number redial . . . . . 19
Liquid . . . . . 35
List
calls list . . . . . 19, 20
draft message list (SMS) . . . . . 22
entry . . . . . 20
incoming message list (SMS) . . . . . 23
last number redial list . . . . . 19
missed calls . . . . . 20
Listening in to call . . . . . 31
Lock (keypad) . . . . . 14
Loudspeaker volume . . . . . 32

## M

Mains adapter . . . . . 5
Making calls
answering a call . . . . . 13, 14
external . . . . . 13
internal . . . . . 30
Making cost-effective calls . . . . . 20
Medical appliances . . . . . 5
Menu
back one menu level . . . . . 15
end tone . . . . . 32
menu guidance . . . . . 15
overview . . . . . 11
Message
copying number to the directory . . . 27
deleting . . . . . 27
marking as new . . . . . 27
playing back . . . . . 27
Message key
opening list . . . . . 23
opening lists . . . . . 19
Missed call . . . . . 20

## N

Network mailbox . . . . . 29
Network provider code, automatic . . . 21
Number
  displaying caller's number (CLIP) . . . 13
  setting for SMS centre . . . . . 24
  storing in directory . . . . . 16, 17

## O

On/off key . . . . . 1
Operation (preparing to use the phone) . . . . . 8
Order of entries in directory . . . . . 39

## P

PABX
  operating base station on PABX . . . . 34
  setting dialling mode . . . . . 34
  setting flash time . . . . . 34
  SMS . . . . . 24
  switching to tone dialling . . . . . 34
Pack contents . . . . . 8
Paging . . . . . 2, 30
Phone jack assignment . . . . . 8
Phone number
  displaying caller's number (CLIP) . . . 13
Playing back
  announcement (answering machine) . . . . . 26
  message (answering machine) . . . . 27
Playing back/deleting announcements (answering machine) . . . . . 26
Power consumption (base station) . . . 37
Preselection . . . . . 21
  saving, changing entry . . . . . 21

## Q

Questions and answers . . . . . 35

## R

Recall key . . . . . 1
Recording time (answering machine) . 28
Registering (handset) . . . . . 9, 29
Restoring default settings
  base station . . . . . 34
  handset . . . . . 33
Ringtone
  changing . . . . . 32, 34
  setting melody . . . . . 32
  setting volume . . . . . 14, 32
  suppressing . . . . . 32

## S

Safety precautions . . . . . 5
Searching
  handset . . . . . 30
  in directory . . . . . 16
Sending
  directory entry to handset . . . . . 17
  SMS . . . . . 22
Service . . . . . 36
Setting date . . . . . 10
Setting flash time (PABX) . . . . . 34
Setting melody (ringtone) . . . . . 32
Setting time . . . . . 10
Setting volume
  earpiece . . . . . 32
  handset loudspeaker . . . . . 32
  loudspeaker . . . . . 32
  ringtone . . . . . 32
Setting wake up time . . . . . 33
Shortcut (digit combination) . . . . . 11
SMS . . . . . 22
  deleting . . . . . 23
  draft message list . . . . . 22
  forwarding . . . . . 24
  incoming message list . . . . . 23
  reading . . . . . 23
  replying to and forwarding . . . . . 23
  self help with error messages . . . . . 25
  send centre . . . . . 22
  sending . . . . . 22
  to PABX . . . . . 24
  troubleshooting . . . . . 25
  writing . . . . . 22
  writing text . . . . . 39
SMS centre
  changing number . . . . . 24
  setting . . . . . 24
SOS mode . . . . . 6
Special characters . . . . . 39
Speed dialling
  answering machine . . . . . 28
  network mailbox . . . . . 29
Speed dialling list . . . . . 17
Suppressing
  first ring . . . . . 32
  preselection . . . . . 21

## T

Talk key . . . . . 1
Technical data . . . . . 37
Text message, see SMS
Tone dialling . . . . . 34
Troubleshooting . . . . . 35
  SMS . . . . . 25

## V

Volume
  ringtone . . . . . 32

## W

Wall mounting for base station . . . . . 40
Warning tone (battery) . . . . . 33
Writing, editing text . . . . . 39